OPERATION, PARTS AND SAFETY MANUAL

VISIT THE SIGNODE WEB SITE
http://www.signode.com

SIGNODE®

LBX-2300/2330

POWER STRAPPING MACHINES
(SHORT FRAME)

IMPORTANT!
DO NOT DESTROY

It is the customer's responsibility to have all operators and servicemen read and understand this manual.

Contact your local Signode representative for additional copies of this manual.

READ ALL INSTRUCTIONS BEFORE OPERATING THIS SIGNODE PRODUCT

SIGNODE • 3620 WEST LAKE AVENUE • GLENVIEW, ILLINOIS 60025 U.S.A.

© Copyright 2008, Signode 512118 8/2008

CONGRATULATIONS

Thank you for purchasing your LBX-2300/2330 Strapping Machine. The LBX-2300/2330 Strapping Machine was designed and built in the USA by Signode, Glenview, Illinois and West Union, Iowa. The LBX-2300/2330 has been designed to be the most reliable, maintenance free strapping machine ever produced for customers with your packaging needs. The revolutionary design of the LBX-2300/2330 eliminates the adjusting and tuning required by strapping machines of the past. The innovative design of this machine allows for every maintenance part to be replaced easily and quickly with very little or no instruction.

Considerable effort has been made to ensure that this product conforms to our high quality standards. However, should you experience any difficulties, please contact your Signode Representative with your machine model and serial number.

Thank you for your help.

All conditions and options have been detailed in this manual to guide and alert operating and service personnel with respect to safety, operation and maintenance procedures. A complete parts listing, with exploded views, has been included in this manual in the event replacement parts must be ordered. Please review each section of this manual before operating your machine.

SECTION 1. GENERAL MACHINE INFORMATION

SECTION 2. MACHINE SET-UP & INSTALLATION

SECTION 3. OPERATING THE LBX MACHINE

SECTION 4. MAINTENANCE & TROUBLESHOOTING

SECTION 5. ELECTRICAL INFORMATION

SECTION 6. FRAME & DISPENSER INFORMATION

SECTION 7. STRAPPING HEAD INFORMATION

SECTION 8. OPTIONS & SUPPLEMENTAL INFORMATION

PLEASE NOTE: Most of the fasteners in this machine are metric. Before removing and replacing any part, refer to the parts listing to determine the proper tools to use and the correct size hardware that may have to be replaced.

⚠ SAFETY INSTRUCTIONS

WARNING - READ AND FOLLOW THESE INSTRUCTIONS - FAILURE TO DO THIS COULD RESULT IN SEVERE PERSONAL INJURY.

OPERATING INSTRUCTIONS

1. **Only people trained in the use of strapping machines are to operate or service this machine.**
2. **Read all signs on machine. Do not remove, modify or deface any sign. Replace all damaged signs.**
3. **Inspect the machine for unsafe conditions - DAILY - and replace all worn or broken parts.**
4. **Keep work area uncluttered and well lit.**
5. **If you require safety instructions in another language, contact your local Signode representative.**

MAINTENANCE

1. **Establish a preventive maintenance program for your machine by following the preventive maintenance program in this manual.**
2. **To ensure proper machine operation, use the specified power sources listed in this manual.**
3. **Do not overload the machine by exceeding the package size specification.**
4. **Remove all packages from the machine before performing service.**
5. **Unless otherwise noted in this manual, disconnect and lockout all power before servicing your machine.**
6. **Follow all maintenance and service instructions in this manual.**

MOVING MACHINE PARTS

1. **Disconnect and lock out all power to Signode's machines before entering the strap chute area.**
2. **Never put any part of your body into the strap chute area or machine enclosure with machine power on.**
3. **Never stand on the machine table-top.**

MACHINE INSTALLATION

1. **All customer interlocks must be connected as shown in this manual's electrical drawings. Failure to properly connect interlocks can result in improper machine operation and/or personal injury.**
2. **Be familiar with the locations of safety interlocks/guards and Emergency Stop Devices - refer to machine manual topic "Disconnect & Lockout Procedures".**
3. **Do not defeat any safety interlock or safety device. Do not operate machine with any safety devices/guards removed.**
4. **Before operating the machine, ensure that all safety interlocks and Emergency Stop buttons are operating properly.**
5. **Unauthorized modifications can present a safety hazard to machine personnel and will void the machine warranty.**
6. **Secure the machine in place using the locking casters.**

PERSONAL PROTECTION

1. To prevent back or other body injuries, your employer must provide proper lifting and/or handling instructions. Your employer may also contact the National Safety Council, Itasca, IL 60143-0558 for information on lifting techniques.
2. When removing tensioned strap from a package, proceed as follows:
   a. Wear eye, face and hand protection
   b. Before cutting strap, make sure all personnel are at a safe distance.
   c. Hold the strap against the load above the cutter as shown.
   d. Using the proper Signode strap cutter, cut strap as pictured.
   e. Stand clear of unheld strap end which will spring out if under pressure.
3. Always wear steel reinforced safety shoes.
4. Always wear safety glasses with side shields which conform to ANSI Standard Z-87.1 or EN 166
5. Wear protective gloves when handling strap.

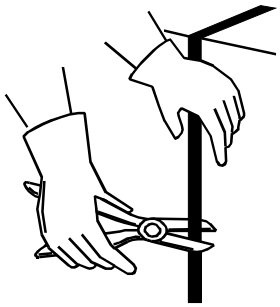

ENVIRONMENTAL INFORMATION

The emissions produced during the heat sealing process may be an irritant to some people. Use this machine in areas that are externally ventilated. Should you be affected by these fumes, move away from machine to fresh air.

LOCKOUT/TAGOUT

1. Follow OSHA 1910.147 (Lockout/Tagout Regulation) for machine lockout procedures and other important lockout/tagout guidelines.
2. Be familiar with all lockout sources on this machine, refer to the "Lockout & Tagout" section of this manual.
3. Even after a machine has been locked out, there may be stored energy in the system. To ensure that all stored energy is relieved, wait at least one minute before servicing electrical capacitors and wait 5 minutes for hot knife to cool.
4. Before performing service in the strap chute area, disconnect and lockout machine power.

MOVING THE MACHINE

Wheel kits are standard for Signode general purpose machines. A forklift may be used to transport the machine from one location to another. Consult your employer for proper lifting and handling methods.

ACR DISCHARGE

Some machine models may be equipped with the optional Automatic Cut-Off & Refeed (ACR) device. Customers operating these machine are encouraged to provide a waste container to collect the strap which is discharged from the machine. Different types of machines may have various discharge locations. Contact your local Signode representative if you need assistance in identifying your ACR configuration. Collected strap should be properly recycled.

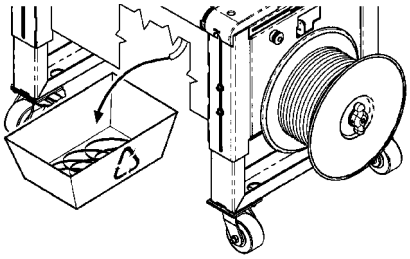

SECTION 1

MACHINE SPECIFICATIONS (1-1)

MAJOR MACHINE COMPONENTS (1-2)

DISCONNECT AND LOCK OUT PROCEDURES (1-3)

LBX-2300/2330 MACHINE SPECIFICATIONS

STRAP SIZES:	● 100 Series Strapping, 5mm wide. ● 200 Series Strapping, 6mm (1/4") wide.
CYCLE RATE:	Will depend upon size of chute, package and machine options.
PACKAGE SIZE:	Maximum package size depends upon the size of the chute. See section 2.
MACHINE DIMENSIONS:	See Section 2.
TENSION RANGE:	● Variable tension from 2 to 50 lbs.
AC INPUT VOLTAGE:	● 115 Volt, 60 Hertz, Single Phase ● 230 Volt, 50 Hertz, Single Phase ● 208/230 Volt, 60 Hertz, Three Phase ● 230 Volt, 50 Hertz, Three Phase ● 400 Volt, 50 Hertz, Three Phase ● 460 Volt, 60 Hertz, Three Phase ● 575 Volt, 60 Hertz, Three Phase
FAULT PROTECTION:	Fused
SYSTEM DISCONNECT:	HP Rated switch
DRIVE MOTORS:	● Infeed: 3000 RPM ● Camshaft: 4000 RPM, 100W (BG65050SI & PLG52 36:1) ● Tension: 4000 RPM, 100 W (BG65x50 & PLG52 8:1) ● Feed & Take-Up: 4000, 100W (BG65x50SI) ● Conveyor (LBX-2330 Only): 5000 RPM, 100 W (BG65x50SI & SG80K 24.5:1)
PNEUMATIC PRESSURE FOR COMPRESSION:	Cubic feet of free air, at 80 psi, per cycle: 0.14 cu. ft. for 20x15 single compression machine 0.19 cu. ft. for 28x20 single compression machine 0.38 cu. ft. for 28x20 dual compression machine 0.29 cu. ft. for 33x30, single compression machine 0.39 cu. ft. for 48x20, single compression machine
COMPRESSION FORCE:	Single: 24 lbs. minimum, 120 lbs. maximum (@ 90 psi / 6 bars) Dual: 30 lbs. minimum, 325 lbs. maximum (@ 90 psi / 6 bars)
OPERATING HEIGHT:	See Section 2

MAJOR MACHINE COMPONENTS

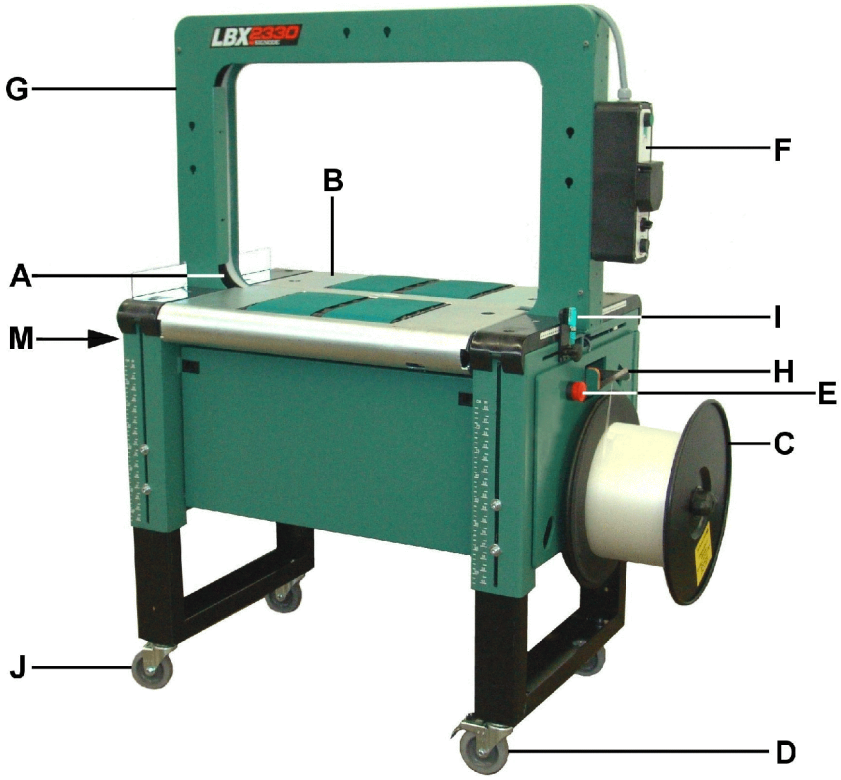

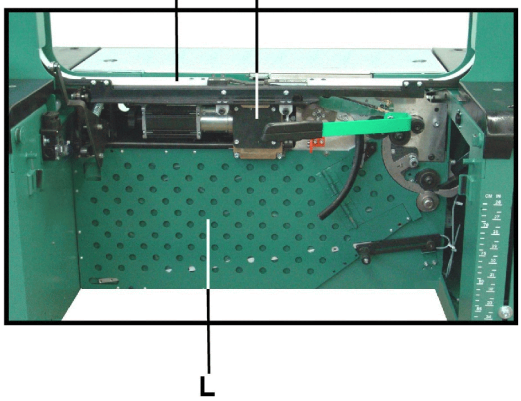

A - CHUTE ARCH

B - TABLE-TOP / CONVEYOR

C - STRAP DISPENSER

D - LOCKING CASTER

E - EMERGENCY STOP

F - OPERATOR ENCLOSURE

G - CHUTE ARCH

H - POWERED INFEED

I - PHOTO EYE

J - SWIVEL CASTER

K - STRAPPING HEAD

L - ACCUMULATOR

M - MAIN DISCONNECT SWITCH

MACHINE DISCONNECT AND LOCK-OUT PROCEDURES

This machine is equipped with shut off devices which satisfy OSHA Regulation 1910.147 (control of hazardous energy sources - lock out/tag out).

⚠WARNING

Become familiar with the location, and operation of each shutoff device.

Disconnect/Lock-Out all power sources before servicing machine.

Never use machine operating controls as a means for locking out power.

ELECTRICAL

MAIN DISCONNECT SWITCH - The main disconnect switch is located on the same end of the machine as the main electrical enclosure.

OPERATING POWER - This power control switch is located on the dispenser side of the machine.

To disconnect/lock-out electrical power to the machine proceed as follows.

- **Turn the main disconnect switch to the OFF position.**
- **Locate the appropriate locking hole on the switch, and apply a locking device.**

NOTE: Some electrical components in the machine may be electrically charged after the power is shut off. Wait no less than one minute after the power has been disconnected before servicing the panel.

SECTION-2

INSTALLATION & SET-UP:

ELECTRICAL CONNECTION (2-1)

MAJOR MACHINE DIMENSIONS (2-2)

MACHINE HEIGHT (2-2)

HOT KNIFE TEMPERATURE (2-3)

ACCUMULATOR BOX (2-4)

PACKAGE FLOW (2-4)

COMPONENT INSTALLATION (2-5)

INSTALLATION & SET-UP

Upon arrival of the LBX-2300/2330, the following steps should be taken:

1. **Machine should be uncrated.**
2. **Visually inspect the machine for any possible transit damage.**
3. **Move the machine to the location for the strapping operation.**
4. **Identify all machine adjustment locations described in this section. Continue to make any necessary inspections or changes described in the following topics.**

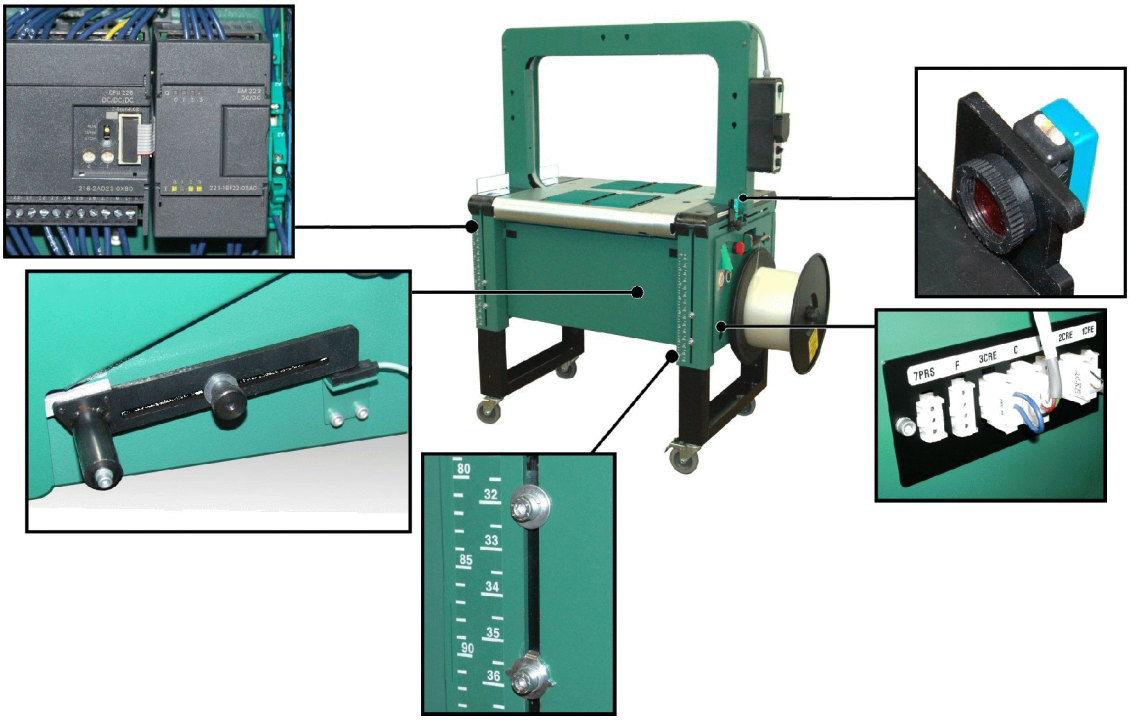

INSTALLATION OF THIS MACHINE SHOULD BE SUPERVISED BY A QUALIFIED ELECTRICIAN OR A SIGNODE SERVICE REPRESENTATIVE!

ELECTRICAL CONNECTION

Strapping machines are manufactured in the following voltage configurations:

- **LBX-2300 & LBX-2330 (Single Phase): 115, 230 Volt**

  NOTE: The machine should be plugged into an appropriate dedicated power source. DO NOT USE A HOUSEHOLD-TYPE EXTENSION CORD. If necessary, use an industrial type extension cord rated for 15 amps or more.

- **LBX-2300 & LBX-2330 (Three Phase): 208, 230, 460 or 575 Volt**

  NOTE: On 3 phase machines, attach an appropriate 3 phase male connector and plug into an appropriate receptacle.

MAJOR MACHINE DIMENSIONS & CLEARANCE REQUIREMENTS

Floor space requirements are governed by the overall dimensions of the machine, plus adequate working clearances.

A - Table top height (adjustable): 26" to 40" (660mm - 1016mm)

B - Table top width: 1016mm (40")

C - Table top length: 686mm (27")

D - Chute Sizes:

16"W x 10"H Maximum Package Size (406mm x 254mm)

20"W x 15"H Maximum Package Size (508mm x 381mm)

28"W x 20"H Maximum Package Size (711mm x 508mm)

33"W x 30"H Maximum Package Size (838mm x 762mm)

48"W x 20"H Maximum Package Size (1219mm x 508mm)

48"W x 48"H Maximum Package Size (1219mm x 1219mm)

E - Dispenser Depth: 280mm (11")

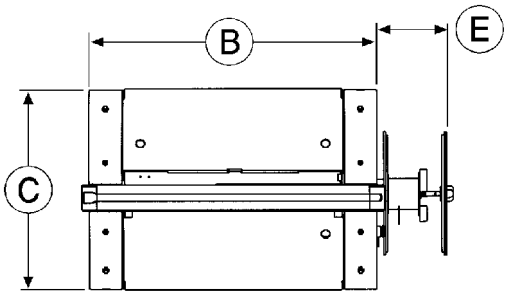

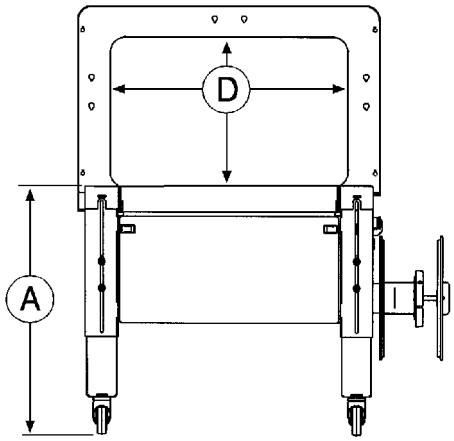

MACHINE HEIGHT

Take appropriate safety measures when adjusting the machine's operating height.

Typically, the machine's tabletop height is adjusted to match that of the application environment. This adjustment determines overall height. Raise the machine <u>using a fork lift</u> appropriately positioned under the frame. Loosen the eight socket head cap screws and adjust the leg position to the desired height. Securely tighten the mounting screws and lower the machine.

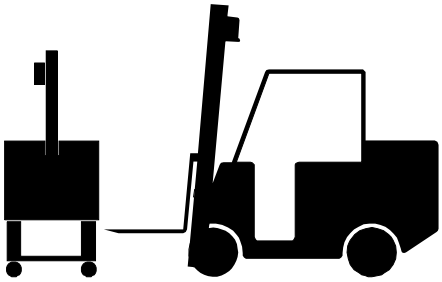

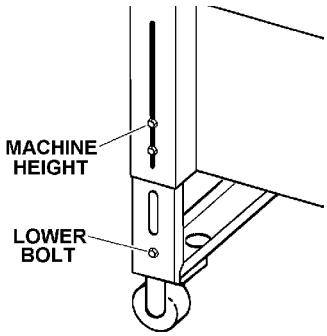

NOTE: Do note remove the four lower bolts (one per leg) unless machine is being lowered below 28" (711mm) operating height.

HOT KNIFE TEMPERATURE CONTROL

The Hot Knife temperature control is used to adjust the hot knife temperature if necessary due to the application environment and/or the strap type being used. The temperature control is found on the main PLC as indicated by "1".

NOTE: Turning the Hot Knife Temperature control to the hottest position does not produce the best strap welding.

Turn the temperature control clockwise to increase the hot knife temperature. Turn the temperature control counter-clockwise to decrease the hot knife temperature.

Adjust the hot knife temperature to achieve the best possible strap joint.

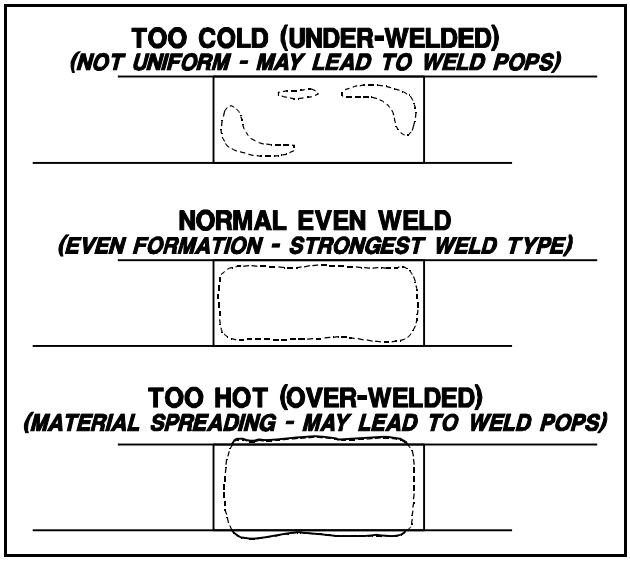

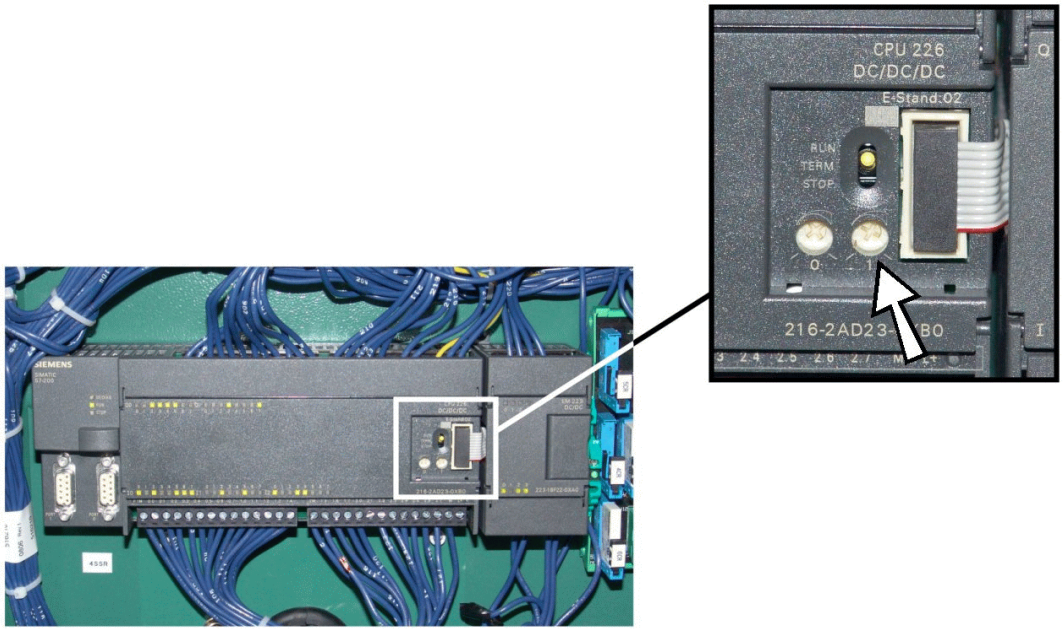

INSTALLATION & SET-UP, Continued

ACCUMULATOR BOX (STRAP QUANTITY)

The purpose of the Accumulator Box is to store reserved strapping for when the machine is rapidly cycling. The Accumulator Box should be set to store an appropriate amount of strap for the packaging requirements. Moving the knob downward will increase the accumulator box storage quantity.

NOTE: Having too much or too little strap in the accumulator box can be detrimental to machine performance.

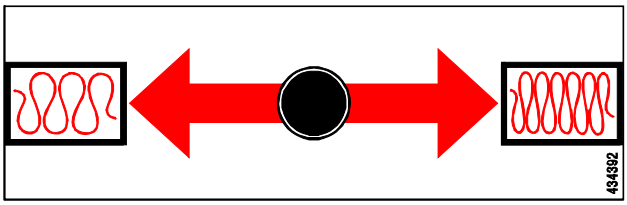

PACKAGE FLOW (LBX-2330)

All LBX-2330 machines are typically set-up to have "Forward" conveyor flow. However, package flow direction can be reversed using the instructions below.

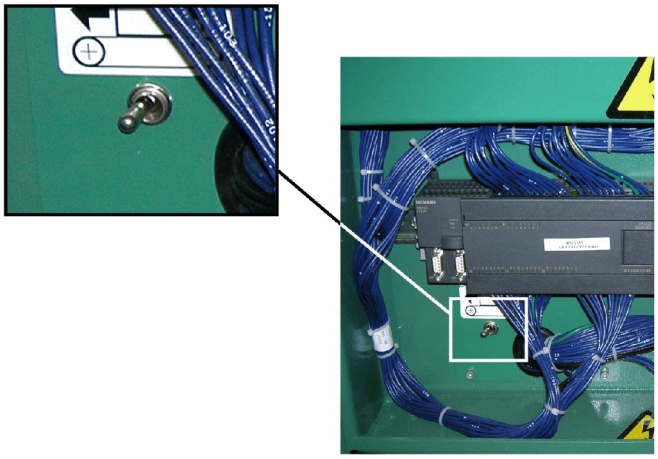

CONVEYOR DIRECTION SWITCH

1. **Disconnect and lock out the machine power. Open the electrical panel access door and locate the conveyor direction toggle switch. Select the desired flow direction. Close and lock the access door.**

2. **Move the photo-eye to the opposite side of the machine by removing the mounting screw. Reposition the eye and resecure the mounting screw.**

3. **If the machine is equipped with an optional package compression clamp, it may be necessary to re-adjust the clamp soak time as required for your application. Review information shown in Section 5 of this manual for specific information on the delay adjustment.**

4. **Restore machine power and test the machine.**

LBX-2330 PHOTO EYE

COMPONENT INSTALLATION

Each machine option will have its own specific instructions for mounting that option to the machine. However, the final step of installing any machine component is the electrical connection. All equipment is routed into one of two connection panels. The first panel is in the machine's transformer enclosure located on the back of the machine. The second connection panel is enclosed in the end of the machine which supports the strap dispenser and infeed.

Install any machine component into the connection panel as follows:

1. **Disconnect and lock out all machine power.**

2. **Open the strap dispenser access door. Pull on the Light-Green latch which secures the door. The strap dispenser enclosure door (hinged) will swing out allowing access to the connection panel.**

3. **Component connections are clearly marked on the connection panel. Each component will have it's own unique socket.**

4. **Plug the control cable into the appropriate marked plug. If any additional instructions have been provided with the component or option, please read those instructions for any additional details. Cable sockets are identified on the following page.**

5. **Close the dispenser door. Restore machine power and test optional equipment as needed.**

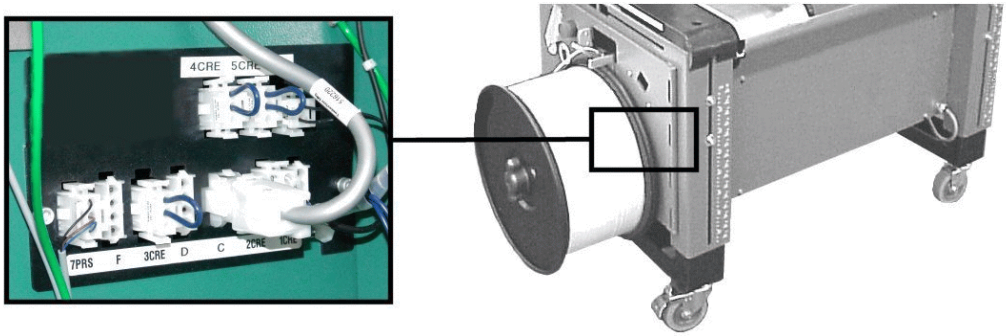

Note: Connections plugs may vary from one machine model to another.

COMPONENT CONNECTIONS - MACHINE OPTIONS

C	D	F	1CRE	2CRE
PACKAGE CLAMP	INDICATOR LIGHT	REMOTE ACTUATOR	LOW STRAP	AUTO PHOTOEYE
3CRE	**4CRE**	**5CRE**	**7PRS**	**AJ**
CONVEYOR SHUTDOWN	PACKAGE SENSOR #1	PACKAGE SENSOR #2	OUT OF STRAP	AIR JET

COMPONENT CONNECTION - MAIN PANEL

1MTR	2MTR	3MTR	5MTR	FAN
INDEX MOTOR	FEED / TU MOTOR	HI TENSION MOTOR	ACR MOTOR	FAN
1PRS	**2PRS**	**3PRS**	**6PRS**	
CONVEYOR SHUTDOWN	PACKAGE SENSOR #1	PACKAGE SENSOR #2	OUT OF STRAP	

SECTION-3

OPERATING CONTROLS (3-1)

STRAPPING A PACKAGE (3-3)

PHOTO EYE ADJUSTMENTS:

- SINGLE STRAP MODE (3-4)
- TWO STRAP MODE (3-4)
- MULTIPLE STRAP MODE (3-5)

LOADING & THREADING STRAP (3-6)

OPERATING CONTROLS

Locate the controls on your machine and become familiar with the operation of each individual control before operating the machine.

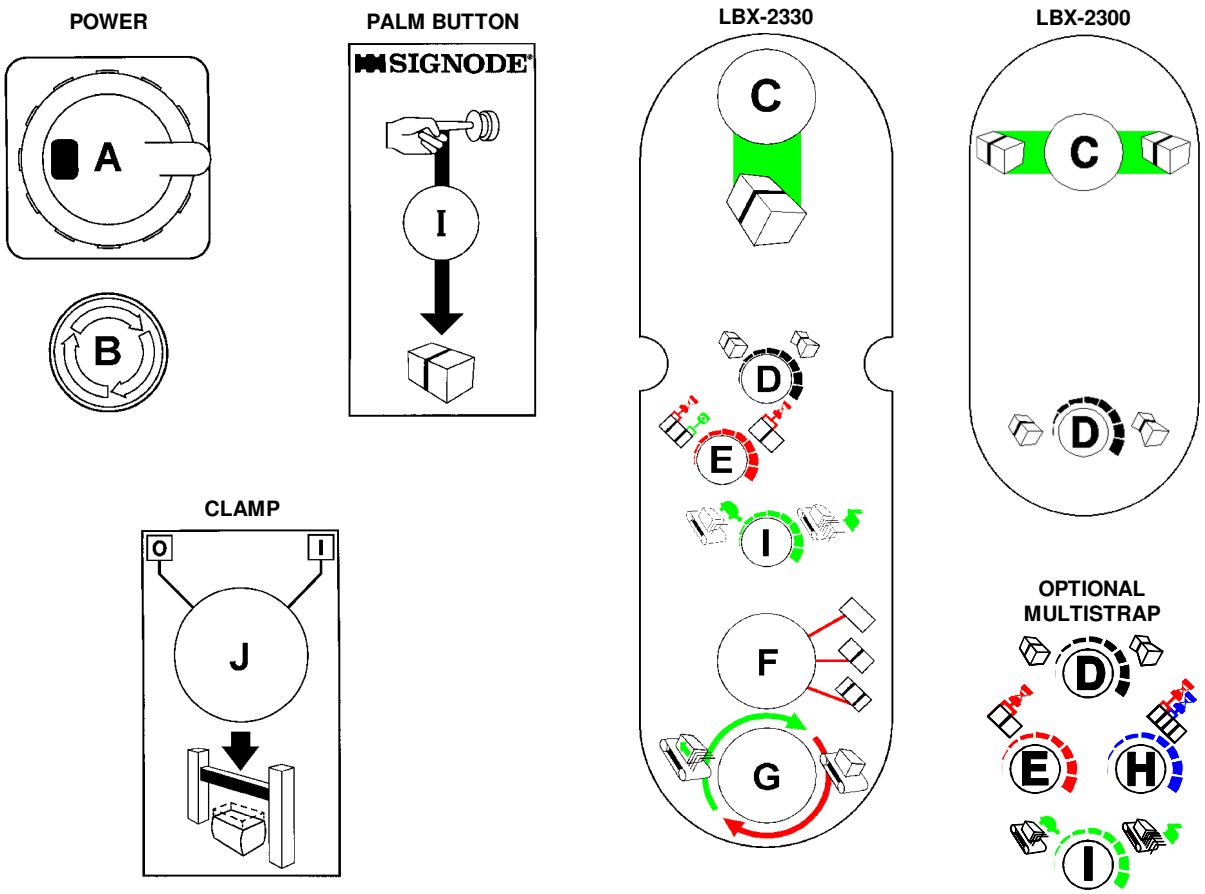

[A] MAIN DISCONNECT SWITCH - The Main Disconnect Switch is operated by rotating between OFF (0) and ON (I) as needed. This disconnect switch also allows the operator to lock out the machine power. This control can be found on same side of the machine as the electrical enclosure.

[B] POWER OFF SWITCH - This control turns off the machine power by pressing the knob in. To restore machine power, turn the knob clockwise to reset. This control can be found on same side of the machine as the strap dispenser.

[C] CYCLE - When this button is lit the machine is powered on and ready to strap. Pressing this button will apply a single strap to a package.

[D] VARIABLE TENSION CONTROL - This control knob is used to vary the amount of strap tension that a package is strapped with. Rotate this control clockwise for more tension. *NOTE: The weld cool time is increased as the variable tension is adjusted from the Off ("O") position.*

[E] STRAP PLACEMENT CONTROL - Rotating this control clockwise increases the distance from the front of the package to where the strap is placed in the "Single" strapping mode. In the "Dual" or optional "Multiple" strap modes, rotating this control clockwise increases the distance from the front of the package to where the first strap is placed.

[F] STRAP MODE - This control knob selects the appropriate strapping mode. The choices are Bypass, Single, Dual. An optional control pendant can be used to also add “Multiple” strap mode.

[G] CONVEYOR ON/OFF - This pushbutton toggles between turning the conveyor on and off. If the machine power is turned off or an interlock switch is tripped, the conveyor will stop running and can only be turned back on by pressing this button.

[H] STRAP PLACEMENT CONTROL - Rotating this control clockwise increases the distance between consecutive straps placed on a package in the optional "Multiple" strapping mode.

[I] CONVEYOR SPEED CONTROL - Rotating this knob can set the conveyor speed from 10 FPM to 150 FPM.

NOTE: Controls “D”, “E”, “H” and “I” are located behind on the operator enclosure behind the protective cover.

OPTIONAL CONTROLS:

PALM BUTTON (AUXILIARY CYCLE) - This optional pushbutton when pressed, cycles the machine manually to place one strap.

COMPRESSION CLAMP ON/OFF - When this two position control switch is in the on position, the compression bar will advance down onto the package for every strap placed on the package.

FOOT SWITCH (Not Shown) - The optional footswitch when stepped on, cycles the machine manually to place one strap. (Same function as the Palm Button.)

STRAPPING A PACKAGE

Review Operating Controls on the previous pages to efficiently operate this machine.

LBX-2300 MACHINES (Semi-Auto)

1. **Turn ON the Main Disconnect (A) for the machine.**

2. **Wait a minimum of 20 seconds for the Hot Knife to properly warm up.**

3. **Place a bundle on the table top of the machine centered within the chute arch.**

4. **Set the Variable Tension (D) control knob if required.**

5. **To apply a strap, press the Power-ON/Cycle (C) button. If the machine is equipped with an optional Foot Pedal or Palm Button, either device can also be used to place a strap on the package.**

6. **Turn OFF the machine when not in use by either pressing the Power Off Switch or rotating the Main Disconnect Switch to "O".**

LBX-2330 MACHINES (Automatic)

1. **Turn ON the Main Disconnect (A) for the machine.**

2. **Wait a minimum of 20 seconds for the Hot Knife to properly warm up.**

3. **Appropriately adjust the Photo-Eye position and Strap Placement Control (E and optional H) timers. Slide the photo eye as required. Note: Some experimenting may be required.**

   NOTE: If photo eye becomes unblocked before a strap is applied, no strap will be placed on package.

4. **Use the Strap Mode (F) switch to select the desired strapping mode. Set the Variable Tension (D) control knob if required. If required, turn on the optional Package Clamp control.**

5. **Press the Conveyor ON/OFF (G) control to start the conveyor and the automatic strapping mode.**

6. **Turn OFF the machine when not in use by either pressing the Power Off Switch or rotating the Main Disconnect Switch to "O".**

PHOTO-EYE ADJUSTMENTS FOR LBX-2330 MACHINES

SINGLE STRAP MODE

The strap timer "A" starts when the front of the package breaks the package eye. When the timer "A" times out, the machine places the strap on the bundle.

Increase distance "A" to the first strap by moving the package eye away from the chute arch or by turning the strap timer "A" clockwise.

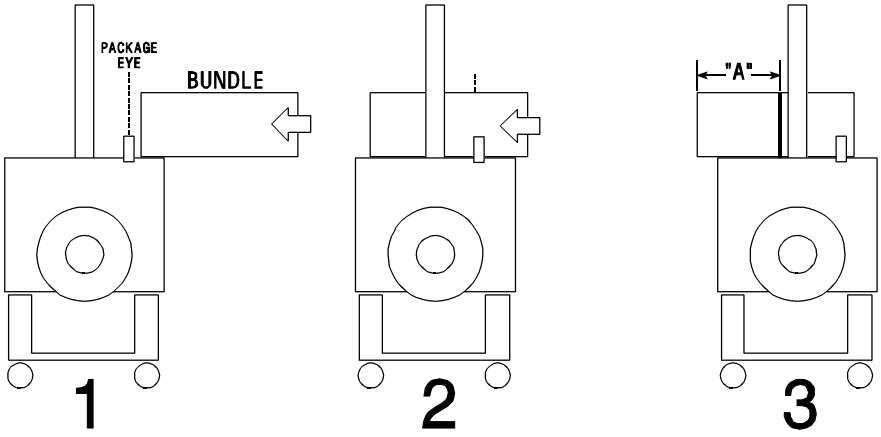

TWO STRAP MODE

The strap timer "A" starts when the front of the package breaks the package eye. When the timer "A" times out, the machine places the first strap on the bundle. After the first strapping cycle is complete, the conveyor will restart. When the back of the bundle clears the package eye the conveyor stops and a second strap will be placed on the bundle.

Increase distance "A" to the first strap by turning the strap timer "A" clockwise. Increase the "Package Eye" placement distance by moving the eye away from the chute arch.

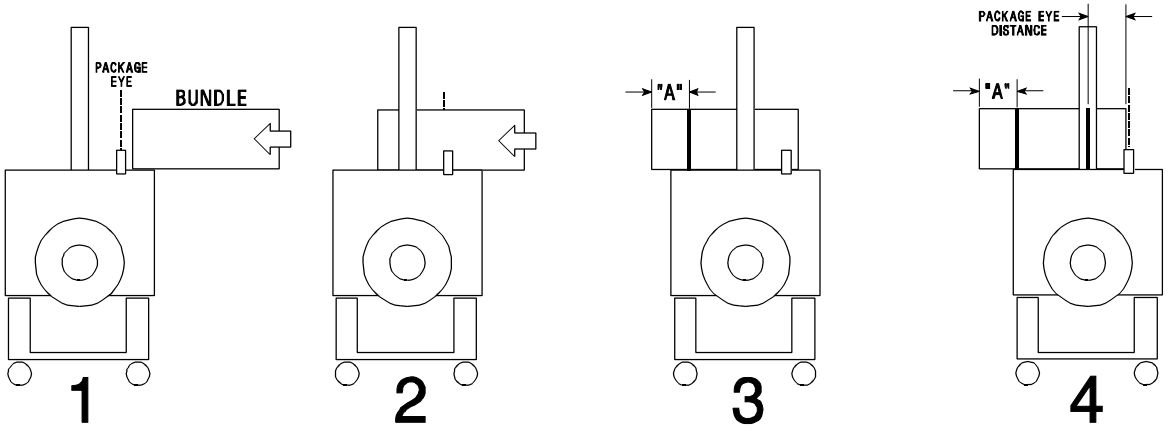

OPTIONAL MULTIPLE STRAP MODE

STRAP MODES (F): LBX-2330 machines with the optional operator pendant have four choices for strapping modes:

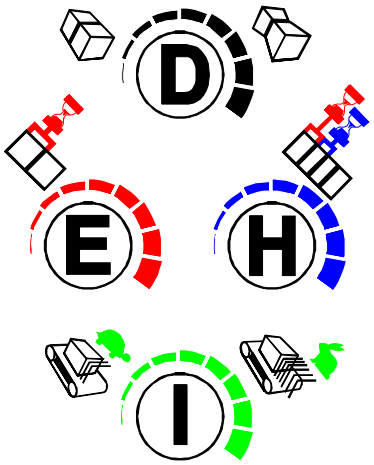

- **Bypass (No Strapping)**
- **Single (One Strap per package)**
- **Dual (Two straps per package)**
- **Multiple (Unlimited number of straps per package)**

STRAP TIMER (H):

Rotating this control clockwise increases the distance between consecutive straps placed on a package in the "Multiple" strapping mode.

SETTING MULTIPLE STRAP MODE

The lead strap timer starts when the front of the package breaks the package eye. When the timer "Times-Out" the machine places the first strap on the bundle.

NOTE: If the photo-eye becomes unblocked before the timer "times out" the first strap will not be applied.

After the first strap has been placed, consecutive straps are placed using the second strap timer. When the back of the bundle clears the package eye the conveyor stops and a final strap is placed on the bundle.

- **Increase distance "A" to the first strap by turning the lead strap timer clockwise.**
- **Increase distance "B" for consecutive straps by turning the second strap timer clockwise.**
- **Increase the strap placement distance "C" from the end of the package by moving the eye away from the chute arch.**

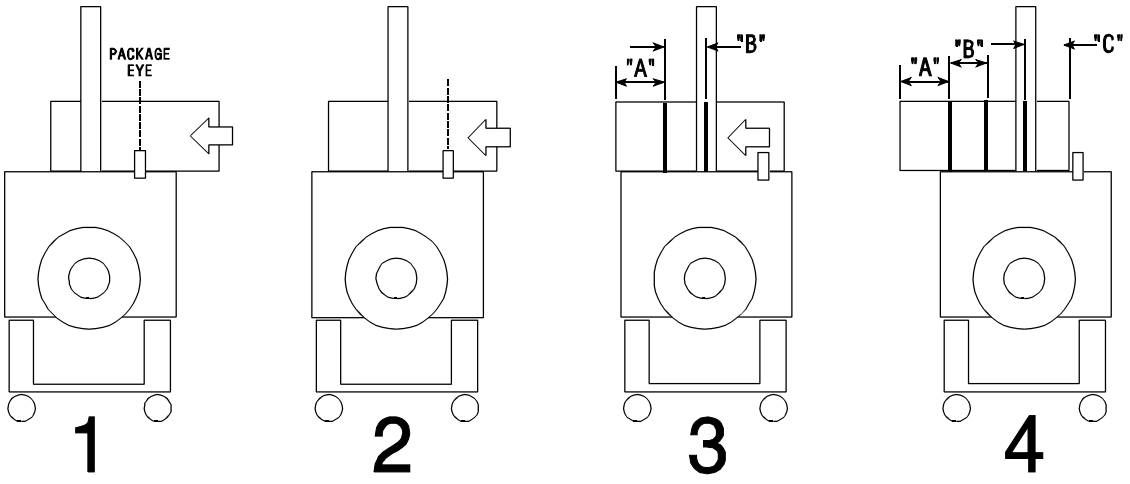

LOADING & THREADING STRAP

To install a coil in the dispenser flange assembly proceed as follows:

⚠ WARNING

Turn off electrical power to machine before proceeding. Failure to do so could result in severe personal injury.

NOTE: Coils of strap are typically packaged in transparent shrink wrap and <u>should be left intact during installation.</u>

1. **Turn off machine power.**

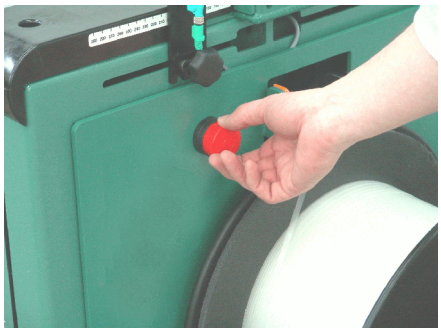

2. **Place a new coil of strap on the rear mounting flange of the coil assembly. Install the outer flange and remove the packaging materials.**

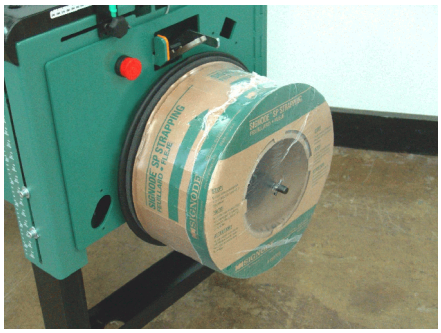

NOTE: strap coils can be loaded in either CW or CCW payoff direction.

2. **Lift the loading lever and insert the strap end into the machine. Insert 6" to 8" of strap in to the machine.**

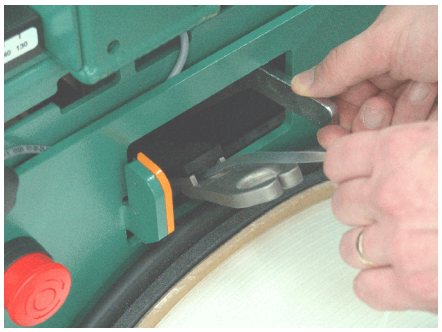

3. **Release the load lever. Bring the strap down through the open slot of the rounded guide.**

Wind any excess strapping back on to the coil of strap.

4. **Turn on the machine power by rotating the power off switch.**

5. **Press the Cycle button to begin the loading sequence.**

The loading sequence automatically fills the accumulator box and threads the strap chute. The machine then places itself into Home Position. Regular strapping can now be performed.

SECTION-4

SCHEDULED MAINTENANCE (4-1)

LUBRICATION (4-1)

TROUBLE SHOOTING (4-2)

SCHEDULED MAINTENANCE

DAILY

Clean the machine of all debris especially around the sealing head, hot knife area, feed/tension wheels, infeed wheels and accumulator box. Use compressed air or a stiff brush when cleaning.

WEEKLY

1. **Inspect for proper strap weld and cut off.**
2. **Clean the feed/tension wheels and guides, and inspect for wear and/or damage.**
3. **Clean strap dust from strap path and accumulator box with compressed air.**
4. **Clean strap dust from the anvil head with compressed air.**
5. **Clean the hot knife's top and bottom surfaces using fine grit emery paper. Clean the surrounding area with compressed air.**

MONTHLY

1. **Clean the hot knife, anvil, platen, grippers and surrounding area. Use compressed air or a stiff brush when cleaning.**
2. **Check the chute assembly for proper operation. Inspect the chute for the following:**
   - **Correct stripper pin action and strap release.**
   - **Chute track should be fully seated against chute arch.**
   - **Chute opener should operate smoothly.**

MACHINE LUBRICATION

The LBX-2300/2330 machines are constructed entirely of self lubricating components and does not require any additional lubrication of any form.

TROUBLESHOOTING

The following items are the most common machine symptoms if problems occur. For symptoms or remedies not shown, contact your Signode service representative for additional information and details. The following machine symptoms are shown in this manual:

#1 Minor strap jam.
#2 Moderate strap jam.
#3 Severe strap jam.
#4 Strap escapes chute during operation.
#5 Strapping head pre-seals.
#6 No weld or poor weld.
#7 Conveyors will not operate when switching strap modes.
#8 Conveyor fails to operate.

#1 SYMPTOM: Minor strap jam, noted by strap ends/loops sticking out from table top.	
CAUSE	**REMEDY**
Strap jammed in anvil head or chute track.	Lift front table top to gain access to chute track. Remove all jammed strap. Close table top and push the Green cycle button.

#2 SYMPTOM: Moderate strap jam, noted by no strap feed or take-up.	
CAUSE	**REMEDY**
Strap jammed in head guides.	Turn machine power OFF. Pull out all strapping from side of machine and discard. Reload strap per loading instructions.

#3 SYMPTOM: Severe strap jam, strap cannot be pulled out from machine.	
CAUSE	**REMEDY**
Strap jammed in head guides and/or around feed and take-up wheels.	Lift front table top to gain access to strap guide. Open front door of machine if necessary. Open strap guide by lifting the release latch. Cut off jammed strapping. Align remaining strap back into strap path and close strap guide. Close table top and push the Green cycle button.

#4 SYMPTOM: Strap escapes chute during operation.

CAUSE	REMEDY
1. Chute does not close completely due to an obstruction.	1. Locate and remove any obstructions and debris in the chute track.
2. Chute track not properly seated against chute arch.	2. Loosen the mounting hardware and position the track against the arch. Tighten the carriage bolts to secure the track.
3. Excessive clearance between the cam and cam follower. Chute track linkage appears loose.	3. Adjust the chute track linkage as described below.

Chute Linkage Adjustment Procedure:

a. Index the head to the home position. Confirm home position by identifying that the roller cam of the chute linkage is on the home position of the index cam as shown. Approriately wedge the cam follower up agaist the cam.

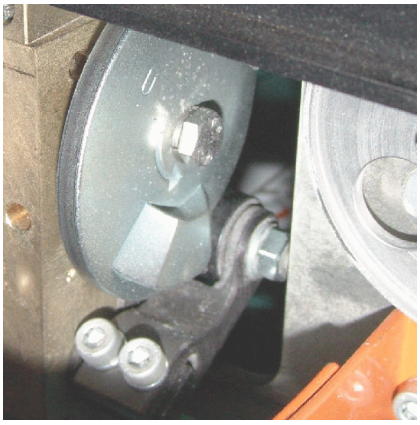

b. Identify the linkage arms which operate the chute track. Note the SHCS identified by arrow.

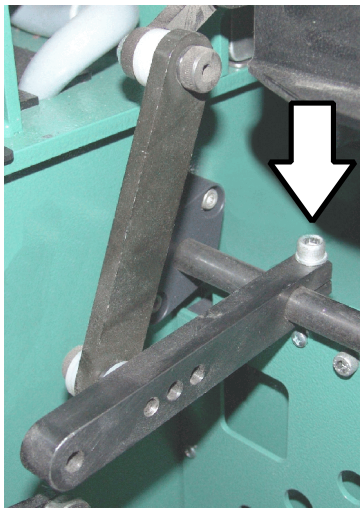

c. Loosen the SHCS that secures the actuator arm to the linkage rod.

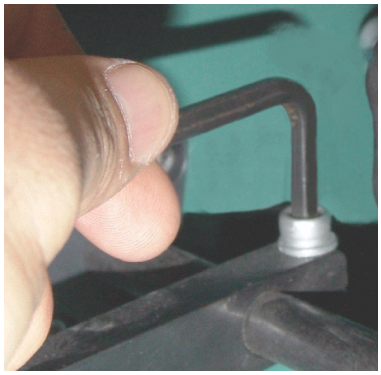

d. Lift up on the end of the actuator arm to remove any clearance.

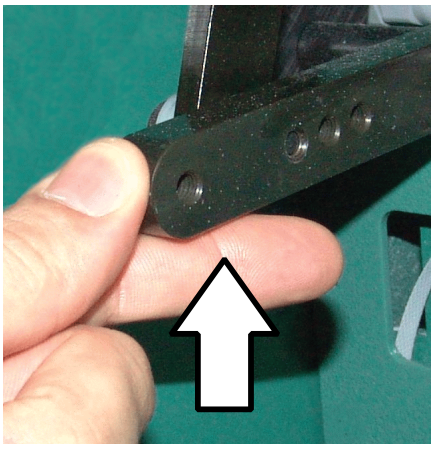

While holding the chute track in place tighten the SHCS to secure the position.

Remove wedge from cam follower.

#5 SYMPTOM: No weld or poor weld.

CAUSE	REMEDY
1. Hot knife cold.	1. Allow machine to properly warm up.
2. Loose connection, broken wire or blown fuse.	2. Tighten all connections and screws. Replace wires and fuse as required.
3. The hot-knife is dirty.	3. Turn machine power OFF, clean the hot-knife surface with fine grit emery paper.
4. Incorrect operating temperature.	4. Adjust hot-knife temperature (B) setting up or down to produce a better weld.
5. Hot knife not being properly inserted between straps.	5. Inspect the hot knife area for debris or a possible obstruction - clean as required. Check for a broken hot knife spring or bent hot knife.
6. Welds are not completely solidified or strap joints occasionally fail from not being properly solidified.	6A. Adjust hot-knife temperature (B) setting up or down to produce a better weld. 6B. Adjust the Weld Cool Timer on the PLC of the main electrical enclosure. Turn adjustment screw (A) clockwise (CW) to increase weld cool time. 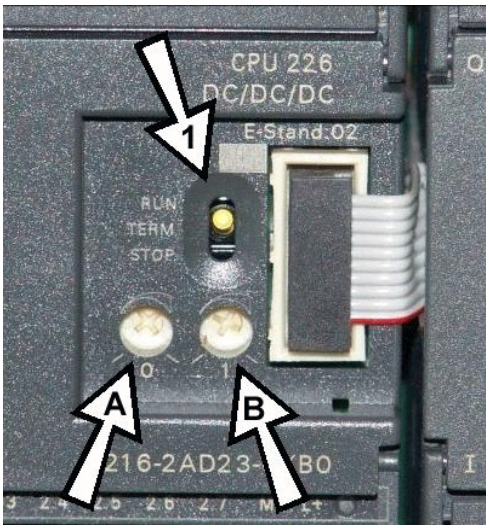 NOTE: Run/Stop switch (1) must be in the RUN position.

#6 SYMPTOM: Strapping head pre-seals.	
CAUSE	**REMEDY**
1. Stripper finger not operating properly.	1. Inspect the striper finger for correct action, adjust as required.
2. Chute opener mechanism not operating properly.	2. Inspect the chute opener for proper operation and/or binding. Adjust or clean as required to correct operation.

#7 SYMPTOM: Conveyors will not operate when switched from Bypass to Single, Dual or Multiple strap mode.	
CAUSE	**REMEDY**
1. Check for machine errors.	1. Clear errors and continue strapping.
2. Strap not at 1LS on machine Power-Up.	2. Press the Cycle button once and restart the conveyor.

#8 SYMPTOM: Conveyors fail to operate.	
CAUSE	**REMEDY**
1. Conveyor photo-eye was blocked for more than 6 seconds.	1. Clear any blockage from the photo-eye beam and press the Conveyor button to restart.
2. Conveyor motor shut down due to overloaded conditions.	2. Remove any excess load and power down the machine. Restart machine to reset error condition. *NOTE: Allow drive motors to cool down if necessary for 5 minutes.*
3. Motor fuse has blown on fuse block module.	3. Replace fuse 7FU on the machine electrical panel.

SECTION-5

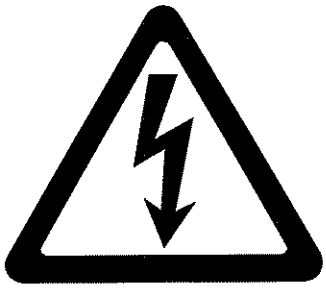

DANGER - Electrical enclosures or machine covers marked with the above symbol expose electrical parts when removed. Contact with live electrical parts will result in severe personal injury or death.

PLC GENERAL INFORMATION (5-1)

PLC IDENTIFICATION (5-2)

FUSES & RELAYS (5-3)

PARTS LISTS & VIEWS:

- SEMI-AUTO OPERATOR ENCLOSURE (5-5)
- AUTOMATIC OPERATOR ENCLOSURE (5-7)

115/230 VOLT 1ϕ (STANDARD)

- SEMI-AUTO CONTROL PANEL (5-9)
- SEMI-AUTO ELECTRICAL SCHEMATIC 519337 (5-13)

115/230 VOLT 1ϕ

- SEMI-AUTO & AUTOMATIC CONTROL PANEL (5-19)
- SEMI-AUTO ELECTRICAL SCHEMATIC 519341 (5-23)
- AUTOMATIC ELECTRICAL SCHEMATIC 519342 (5-31)

208/230/460/575 VOLT 3ϕ

- SEMI-AUTO & AUTOMATIC CONTROL PANEL (5-39)

208/230/460 ELECTRICAL SCHEMATICS

- SEMI-AUTO 519350 (5-43)
- AUTOMATIC 519352 (5-51)

575 ELECTRICAL SCHEMATICS

- SEMI-AUTO 519351 (5-59)
- AUTOMATIC 519353 (5-67)

PLC GENERAL INFORMATION

As the LBX-2300/2330 operates per its program, the PLC's indicator lights will lite up as the input and output connections are signaled. When inputs are received by the PLC, input lights will lite. When signals are sent by the PLC, output lights will lite. The machine can be monitored (or diagnosed) as each of the inputs or outputs triggers a lite on the PLC. Refer to PLC Identification shown at the end of this chapter for specific information on identifying PLC inputs and outputs. Other beneficial lights on the PLC are SF (System Fault), RUN and STOP.

POTENTIOMETER ADJUSTMENTS - Turn the adjustment screws (as noted by arrows) using a small screwdriver. Do not attempt to adjust any other control not identified or factory sealed.

POTENTIOMETER	FUNCTION
"A" WELD COOL (POT-0)	Turn the adjustment screw clockwise (CW) to increase the weld cool time. Turn the screw counter-clockwise to decrease weld cool time.
"B" HOT KNIFE TEMPERATURE (POT-1)	Turn the adjustment screw clockwise (CW) to increase temperature. Turn the screw counter-clockwise to decrease temperature.

ALTERNATE WIRE CONNECTIONS - Connect the wires described below as required.

CONNECTION	FUNCTION
"C" ACR	To enable the optional ACR function, connect any unused wire labeled "4" from inside the wire channel to PLC terminal I1.1.
"D" CONVEYOR	To run conveyor on machine error, connect any unused wire labeled "4" from inside the wire channel to PLC terminal I2.1.
"E" REFEED	To attempt a strap refeed before ACR function, connect any unused wire labeled "4" from inside the wire channel to PLC terminal I2.7. Remove the wire from terminal 2.7 to attempt ACR function then retry a second ACR function.

LBX-2300 (1ϕ STANDARD)

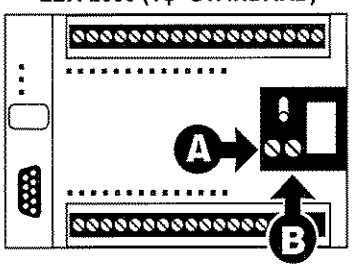

LBX-2300/2330 (1/3ϕ)

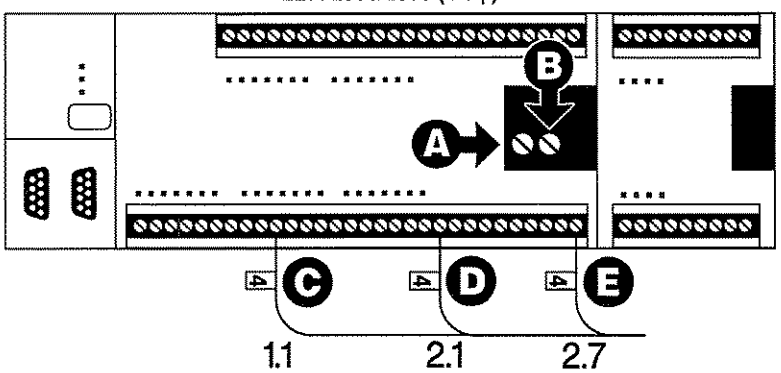

PLC IDENTIFICATION LIGHTS

LBX-2300 1ϕ Std	LBX-2300 1 ϕ 3 ϕ	LBX-2330 1 ϕ 3 ϕ	LED	DESCRIPTION
●	●	●	RUN	PLC Running
●	●	●	STOP	PLC Stopped
●	●	●	SF	PLC System Fault
●	●	●	I0.0	V/F Conveyor - Tension Level
●	●	●	I0.1	Stall Prox (3PRS)
●	●	●	I0.2	Home Prox (2PRS)
●	●	●	I0.3	Cycle (2PBL)
●	●	●	I0.4	Position (6PRS)
●	●	●	I0.5	Feed Limit (1PRS)
		●	I0.6	V/F Conveyor - First Strap
●	●	●	I0.7	PLC Enable
●	●	●	I1.0	Dispenser (4PRS)
●	●	●	I1.1	Out Of Strap (7PRS)
		●	I1.2	V/F Conveyor - Multi Strap
●				Photo Eye / Foot Switch
	●	●	I1.3	Low Strap (1CRE)
	●	●	I1.4	Operatorless Interlock
		●	I1.5	Strap (2CRE)
		●	I1.6	Auto (3PB)
		●	I1.7	Straps (2SS)
		●	I2.0	Straps (2SS)
		●	I2.1	Conveyor (run on error)
		●	I2.2	Conveyor Shutdown (3CRE)
		●	I2.3	Refeed / ACR
	●	●	I2.4	Time Delay Relay (1TDR)
	●	●	I2.5	Package Clamp (1SS)
	●	●	I2.6	ACR Enable
	●		I2.7	Refeed / ACR
		●	Q0.0	Package Clamp (2SOL)
●	●	●	Q0.1	Dispenser (1SSR)
●	●	●	Q0.2	Feed
●	●	●	Q0.3	Take Up
●	●	●	Q0.4	Reverse Tension / Cycle Counter
●	●	●	Q0.5	Tension
●	●	●	Q0.6	Index
		●	Q0.7	Conveyor Direction
●	●	●	Q1.0	Hot Knife (3SSR)
	●	●	Q1.1	ACR Reverse (2CR) (6CR)
●				Dispenser Brake (2SSR)
	●	●	Q1.2	ACR On (2CR)
	●	●	Q1.3	Error (4CR)
		●	Q1.4	Conveyor Interlock (5CR)
	●	●	Q1.5	Dispenser Brake (2SSR)
	●	●	Q1.6	Auto On Indicator
	●	●	Q1.7	Low Strap Indicator

RELAY AND FUSE MODULE 516935-4

LBX-2300, Single Phase (Standard)

PART NO.	QTY	DESCRIPTION
514391	1	OUTPUT MODULE DC (2SSR)
514392	1	OUTPUT MODULE AC (3SSR)
514393	REF	FUSE (OUTPUT MODULE)
514394	3	FUSE 12.5A SLO BLO (4FU,5FU & 6FU)
519338	1	FUSE 16A SLO BLO (7FU)
514364	REF	TERMINAL BLOCK (J1,2,3,4,5 & 6)
514365	REF	TERMINAL BLOCK (J7)
514366	REF	TERMINAL BLOCK (J8 & 9)
514398	1	RELAY (1CR)
434425	1	FUSE (3FU)
516770	2	FUSE (1FU, 2FU)
515554	1	LABEL
515110	1	PLASTIC COVER

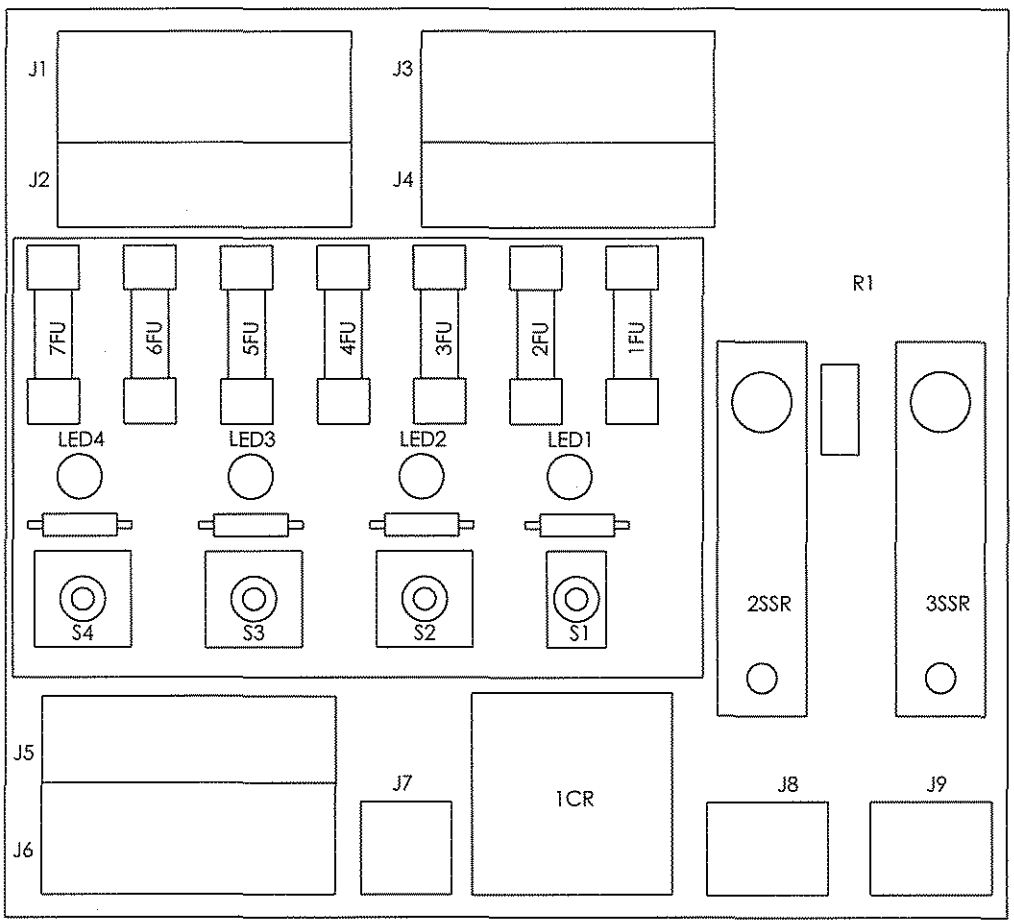

RELAY AND FUSE MODULE 516936-5
LBX-2300/2330, Single/Three Phase

PART NO.	QTY	DESCRIPTION
514391	1	OUTPUT MODULE DC (2SSR)
514392	1	OUTPUT MODULE AC (3SSR)
514393	REF	FUSE (OUTPUT MODULE)
514394	5	FUSE 12.5A SLO BLO (4-6 & 8-9FU)
519388	1	FUSE 16A SLO BLO (7FU)
514364	REF	TERMINAL BLOCK (J1-J6 & J10-J13)
514365	REF	TERMINAL BLOCK (J7)
514366	REF	TERMINAL BLOCK (J8 & 9)
514398	1	RELAY (1CR)
434425	1	FUSE (3FU)
516770	2	FUSE (1FU, 2FU)
515555	1	LABEL
515130	1	PLASTIC COVER
434500	REF	RELAY (2-6CR)

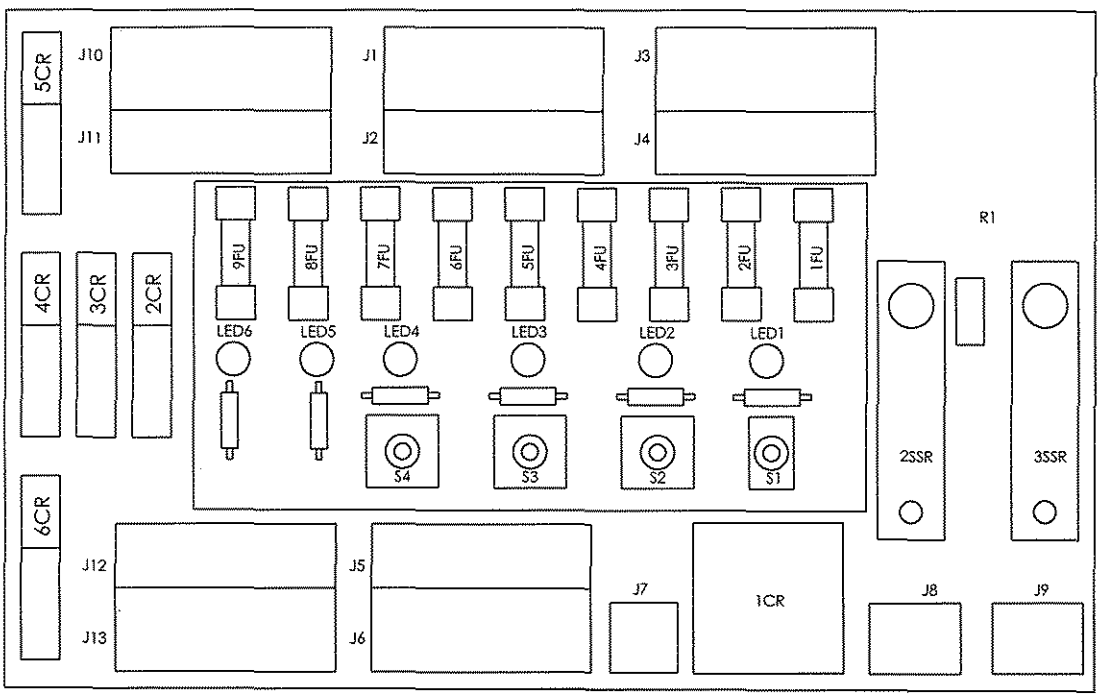

KEY	QTY.	PART NO.	DESCRIPTION
1	1	515581	COVER PLATE WELDMENT, SEMI
2	1	515577	OPERATOR BOX ASSY, SEMI
3	1	434484	1/2" CORD GRIP
4	REF	436233	LED (GREEN)
5	1	436226	ILLUMINATED PUSHBUTTON
6	6	175914	M5 X 12 SBHCS (ZINC)
7	15 FT	515599	CABLE 18 CONDUCTOR
8	1	515625	LABEL, SEMI OPERATOR CONTROL
9	8	292942	PINS
10	1	435808	CABLE ID TAG "B"
11	1	515139	POTENTIOMETER
12	1	434540	KNOB (TIMERS)
13	1	514342	VOLTAGE FREQUENCY CONVERTER
15	2 FT	435344	GASKET
16	2	420216	M4 X 10 SHCS (ZINC)
17	1	293545	15 PIN CONNECTOR HOUSING PLUG
18	1	515596	STRAIN RELIEF
19	2	515597	SHEET METAL SCREW, 6X5/8
20	2	185700	M4 LW
21	2	164966	M4 HEX NUT
NS	2	299069	CONNECTOR
NS	3	514357	90 DEGREE FLAG CONNECTORS

WEARING PARTS ARE THOSE ITEMS WHICH ARE UNDERLINED

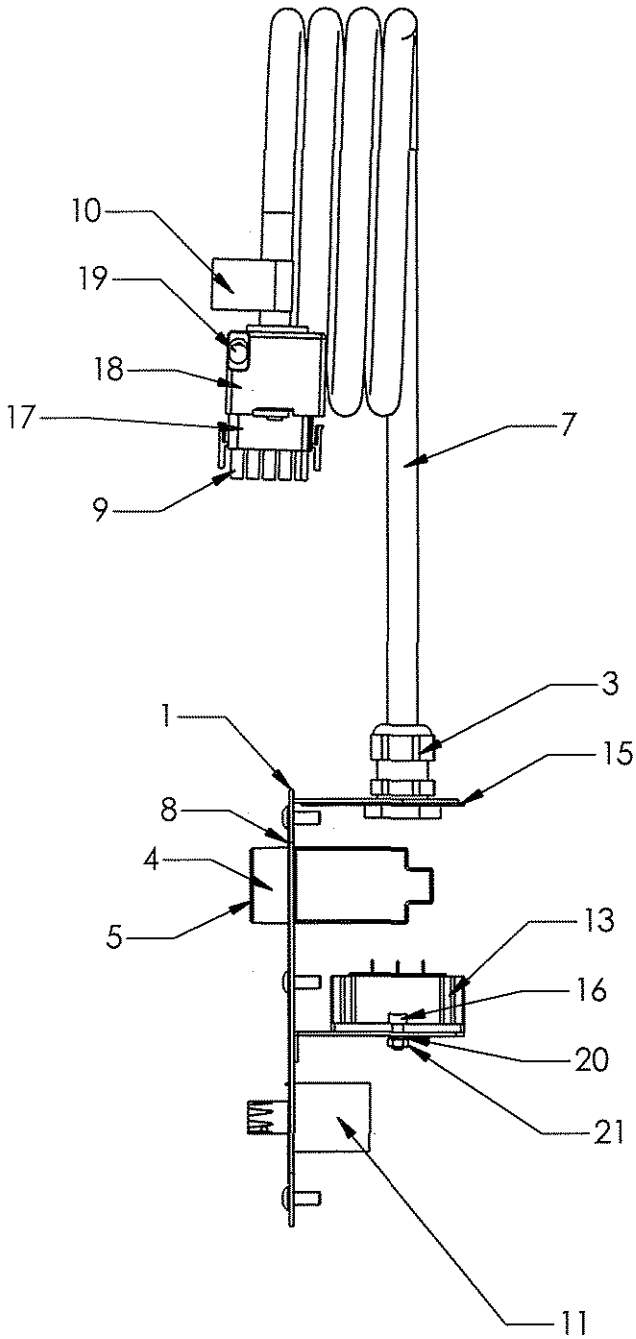
10
19
18
17
9
7
3
15
1
8
4
5
13
16
20
21
11

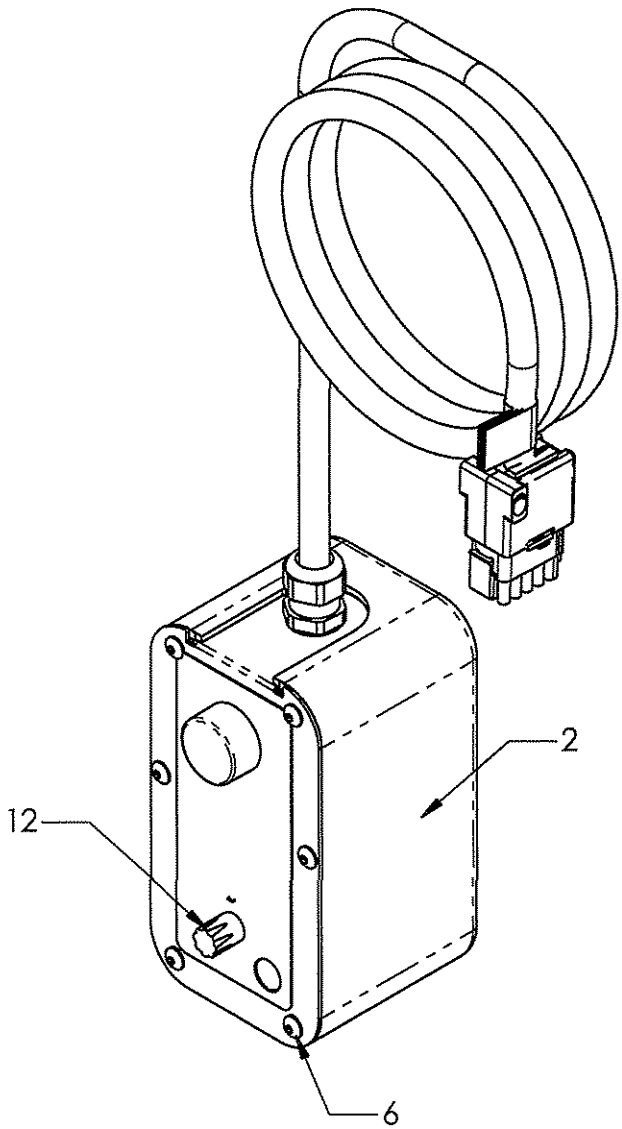
2
12
6

KEY	QTY.	PART NO.	DESCRIPTION
1	1	516937	COVER PLATE WELDMENT, AUTO
2	1	515578	OPERATOR BOX ASSY, AUTO
3	1	434454	3/4" CORD GRIP
4	1	436229	MOUNTING BASE
5	1	436228	SELECTOR SWITCH (3 POS)
6	3	434540	KNOB (TIMERS)
7	REF	436233	LED (GREEN)
8	1	436226	ILLUMINATED PUSHBUTTON
9	6	175914	M5 X 12 SBHCS (ZINC)
10	15 FT	434538	CABLE 18 CONDUCTOR
11	1	516943	LABEL, AUTO OPERATOR CONTROLS
12	1	436227	PUSHBUTTON
13	3 FT	435344	GASKET
14	1	435808	CABLE ID TAG "B"
15	1	515139	POTENTIOMETER
16	2	514342	VOLTAGE FREQUENCY CONVERTER
17	1	515589	POT COVER
18	2	514323	POTENTIOMETER
19	15	292942	PINS
20	1	293545	15 PIN CONNECTOR HOUSING PLUG
21	2	515596	STRAIN RELIEF
22	2	515597	SHEET METAL SCREW, 6X5/8
23	4	171570	M4 FW
24	4	164966	M4 HEX NUT
25	1	436231	1 N/O CONTACT BLOCK
26	1	436232	HWF01 1 N/C CONTACT BLOCK
27	4	433917	M4 X 16 SHCS
NS	2	299069	CONNECTOR
NS	9	514357	90 DEGREE FLAG CONNECTOR

WEARING PARTS ARE THOSE ITEMS WHICH ARE UNDERLINED

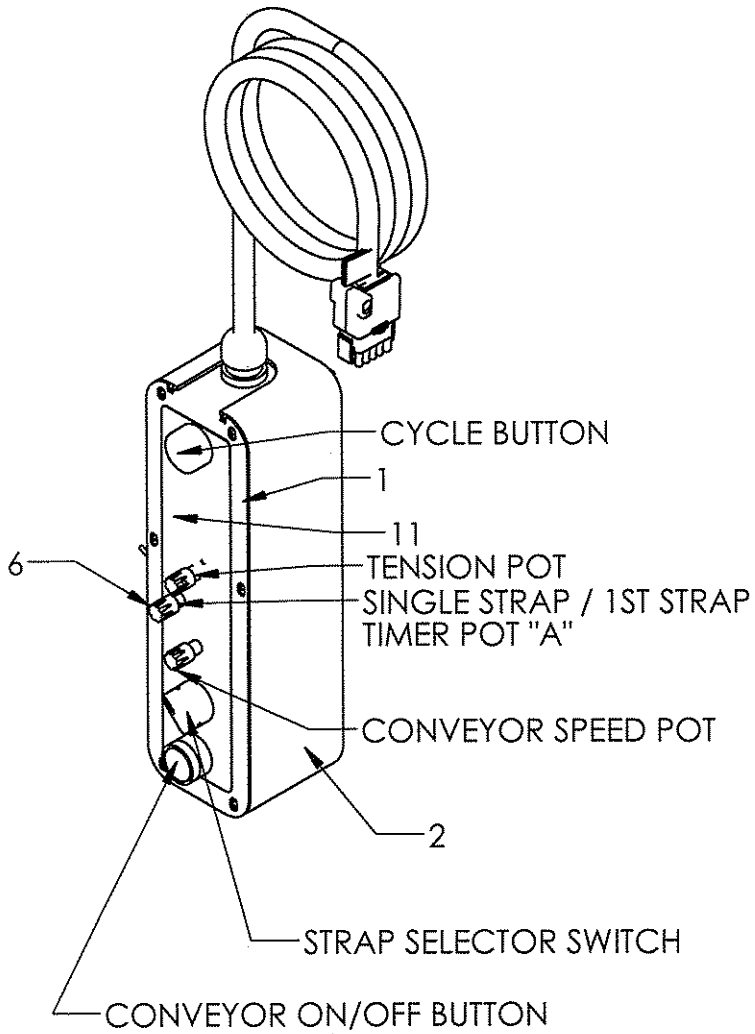
CYCLE BUTTON
1
11
6
TENSION POT
SINGLE STRAP / 1ST STRAP
TIMER POT "A"
CONVEYOR SPEED POT
2
STRAP SELECTOR SWITCH
CONVEYOR ON/OFF BUTTON

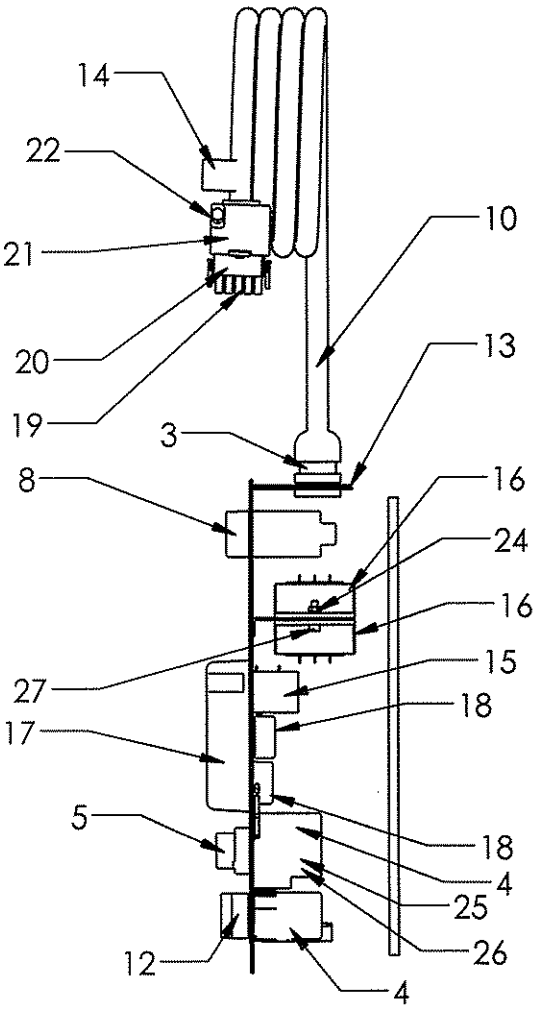
14
22
21
10
20
13
19
3
8
16
24
16
27
15
18
17
5
18
4
25
26
12
4

115-230V SEMI-AUTO ELECT. CONTROLS, 1PH. 60/50 Hz. (STANDARD) 519336-1

KEY	QTY.	PART NO.	DESCRIPTION
1	1	514313	115 VOLT POWER SUPPLY, 1 PH
2	4	251247	M3 X 8 SHCS (ZINC)
3	4	162568	M3 LOCKWASHER (ZINC)
4	2	170118	M5 X 10 SBHCS (ZINC)
5	13	010076	M5 LOCKWASHER (ZINC)
6	4	171571	M5 FLATWASHER (ZINC)
7	4	272418	M5 X 12 SHCS (FLANGED ZINC)
8	1	014797	1/2" GLAND NUT/SLIP RING
9	1	434851	CORD GRIP GROMMET, DOMESTIC
	1	434850	CORD GRIP GROMMET, EURO/UK
10	1	515142	MACHINE WIRE HARNESS, 1 PH
11	REF	515147	POWER HARNESS, 1 PH
12	1	515602	REAR ELECTRICAL PANEL COVER
13	A/R	435344	ELECTRICAL DOOR GASKET
14	REF	434434	PWR. CORD 115V. 60Hz 1PH
	REF	434478	PWR. CORD 230V. 50Hz 1PH UK
	REF	434479	PWR. CORD 230V. 50Hz 1PH EURO
	REF	434228	PWR. CORD 230V. 50Hz 1PH AUS
15	1	071940	CORD GRIP
16	1	516363	CONNECTOR PLATE, 1PH
17	9	281532	M5 X 10 SHCS (ZINC)
18	2	436243	INTERLOCK SWITCH
19	4	438295	CORD GRIP PG-9
20	4	011214	M5 X 16 SHCS (ZINC)
21	2	514331	5 WIRE GROMMET HOLDER
22	4	516931	INTERLOCK SWITCH SPACER
23	1	515374	CONVEYOR PLUG HOLE CAP
24	1	070859	GLAND NUT
* N/S	1	515038	SIGN DISPOSTION
N/S	REF	519337	ELECTRICAL SCHEMATIC
N/S	1	519334	HARNESS
25	1	514375	CAPACITOR ASSEMBLY

* SEE 515037

115-230V SEMI-AUTO ELECT. CONTROLS, 1PH. 60/50 Hz. (STANDARD) 519336-1

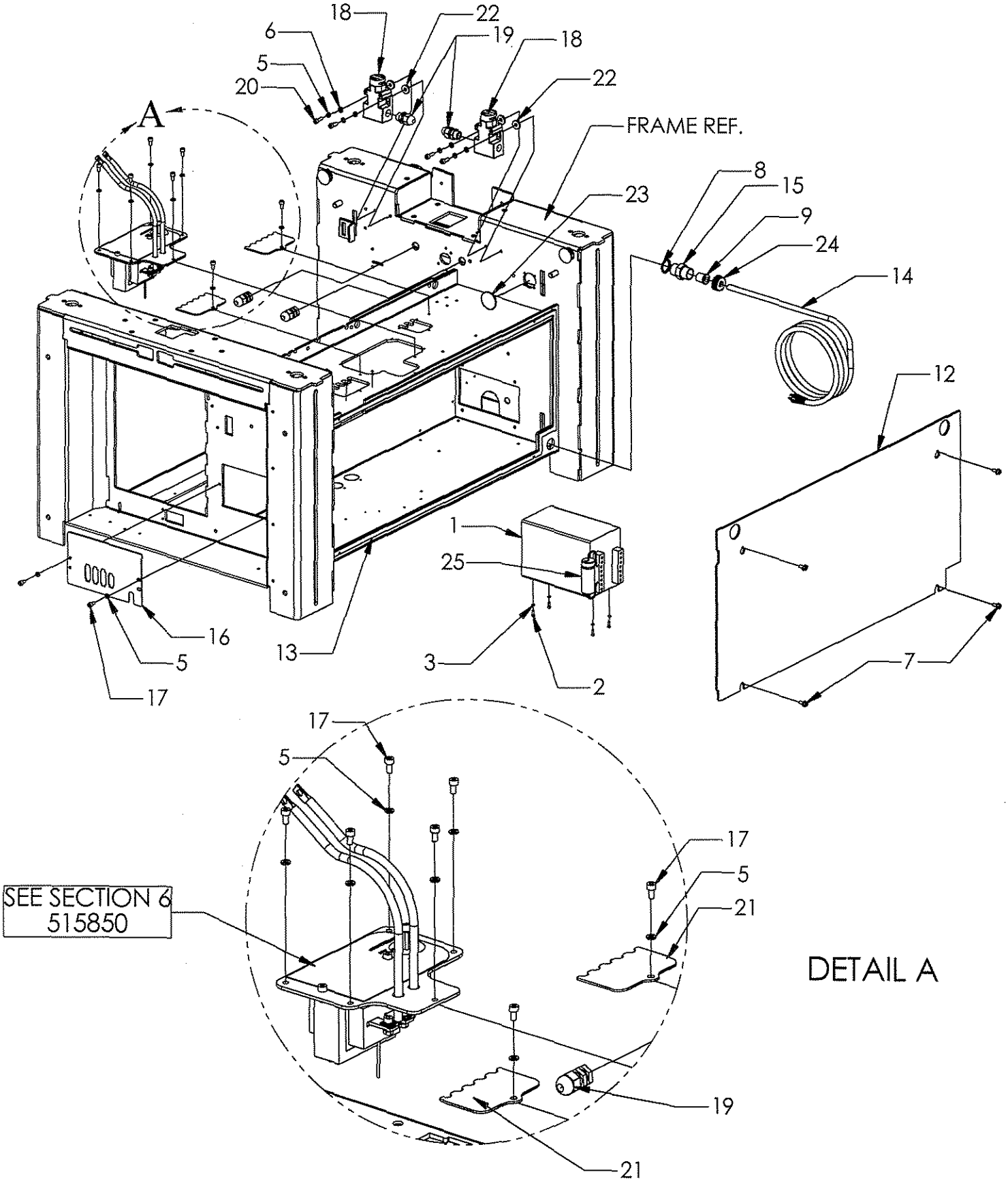

KEY	QTY.	PART NO.	DESCRIPTION
1	1	515627	LBX 2300 PLC DIN RAIL
2	1	439433	COUNTER
3	1	439434	MOUNTING PLATE - COUNTER
4	1	438280	FILLER PLATE
5	1	516934	POWER DISCONNECT
6	1	515611	DISCONNECT SWITCH PLATE
7	1	514337	SOLID STATE RELAY
8	1	515610	HIGH/LOW VOLTAGE ACCESS
9	1	515608	HIGH/LOW VOLTAGE SEPARATOR
10	1	515640*	SIEMENS PLC 24 I/O
11	6	162383	M4 X 8 SHCS (ZINC)
12	6	185700	M4 LOCKWASHER HC (ZINC)
13	2	262765	M3 LOCKWASHER (ZINC)
14	2	262551	M3 X 8 SHCS (ZINC)
15	1	434448	VARISTOR - 39 VOLTS
16	1	680466	PAWL LATCH
17	1	516463	SIDE ELECTRICAL DOOR
18	1	516935	RELAY AND FUSE MODULE
19	2	170118	M5 X 10 SBHCS (ZINC)
20	6	281532	M5 X 10 SHCS (ZINC)
21	8	010076	M5 LOCKWASHER (ZINC)
22	2	171571	M5 FLATWASHER (ZINC)
23	7	433919	M6 X 12 SHCS
24	7	433012	M6 LOCKWASHER HC (BLACK)
25	7	515439	NEOPRENE GASKET 3/16" THICK
26	1	515573	SEMI-AUTO CONV. CONTROL BOX
27	1	515135	TERMINAL BLOCK GROUND
28	1	438276	8MM SQ. KEY
29	1	515639	CIRCUIT BREAKER
30	1	515136	TERMINAL BLOCK END CAP
31	1	431757	M6 EXTERNAL LOCKWASHER
32	1	005465	M6 NUT
33	1	516454	LATCH CAM (12 - 14 MM)

* SPECIFY PROGRAM # - ALONG WITH PART # 515640 WHEN ORDERING PLC's

115-230V SEMI-AUTO ELECT. CONTROLS, 1PH. 60/50 Hz. (STANDARD) 519336-1

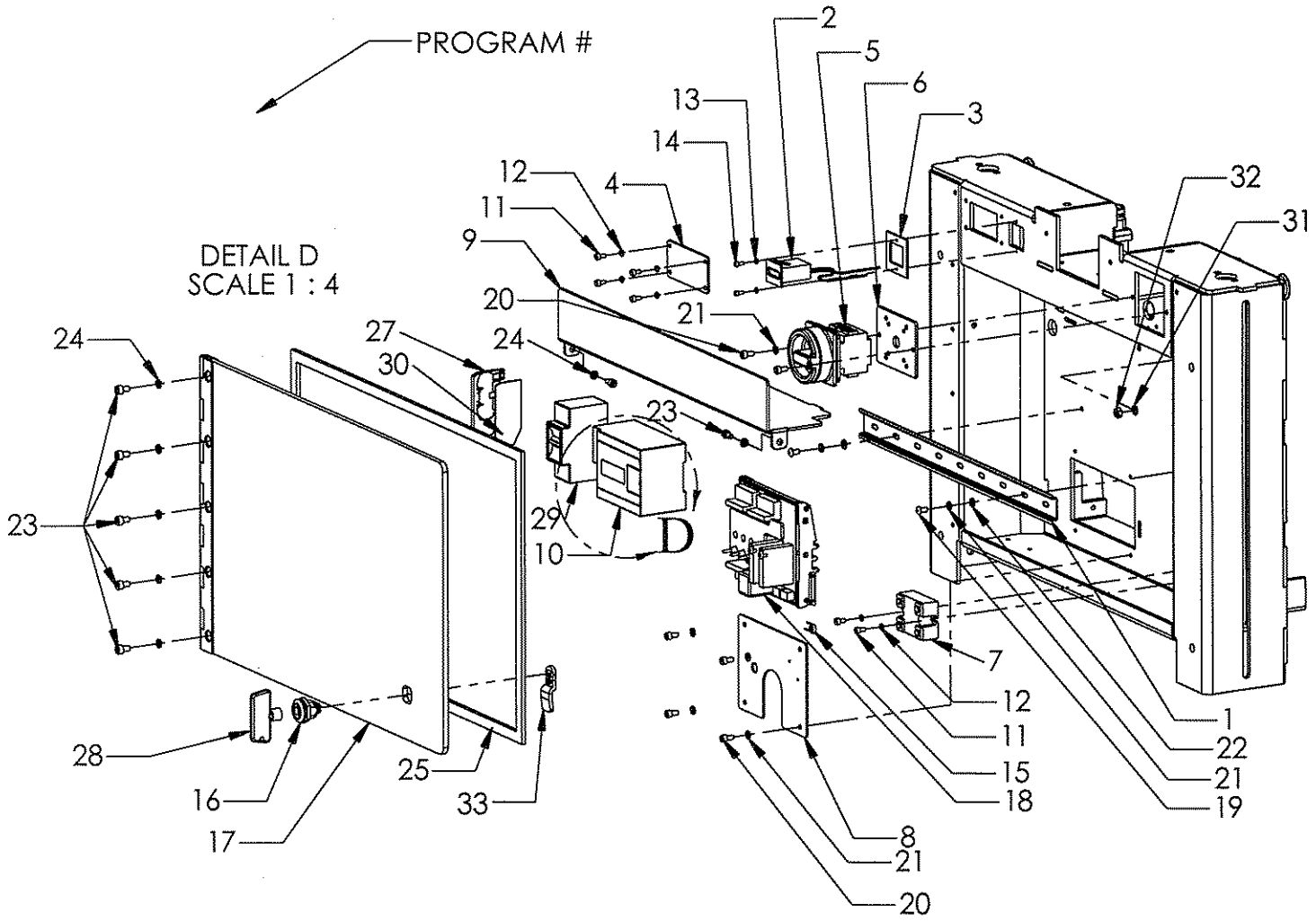

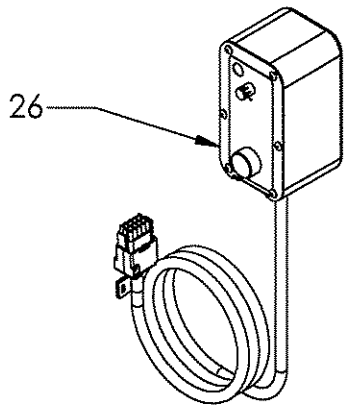

ELECTRICAL SCHEMATIC 100 — 519337-2

LBX-2300 SEMI-AUTO STD, 1 PHASE

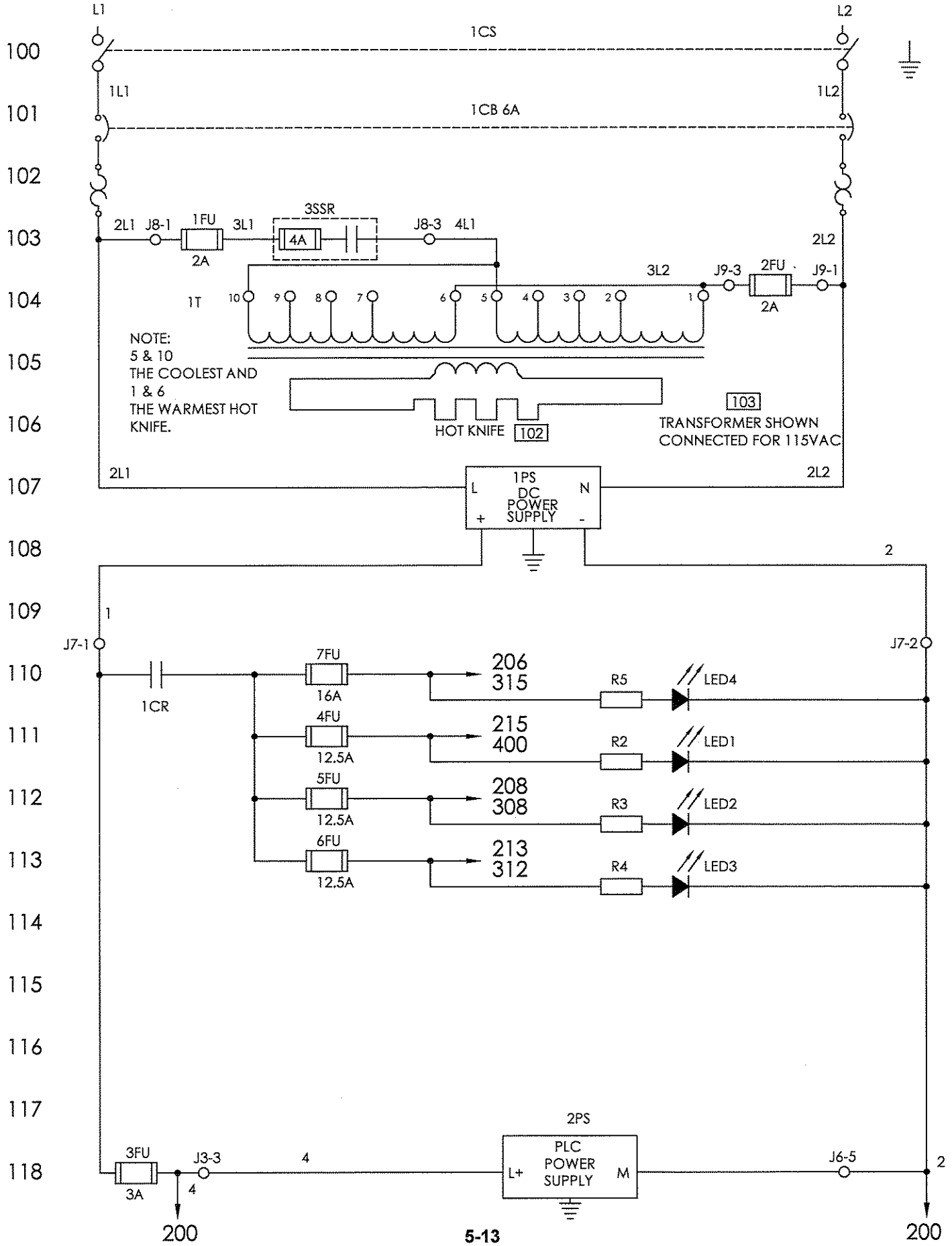

ELECTRICAL SCHEMATIC [100]

519337-2

LBX-2300 SEMI-AUTO STD, 1 PHASE

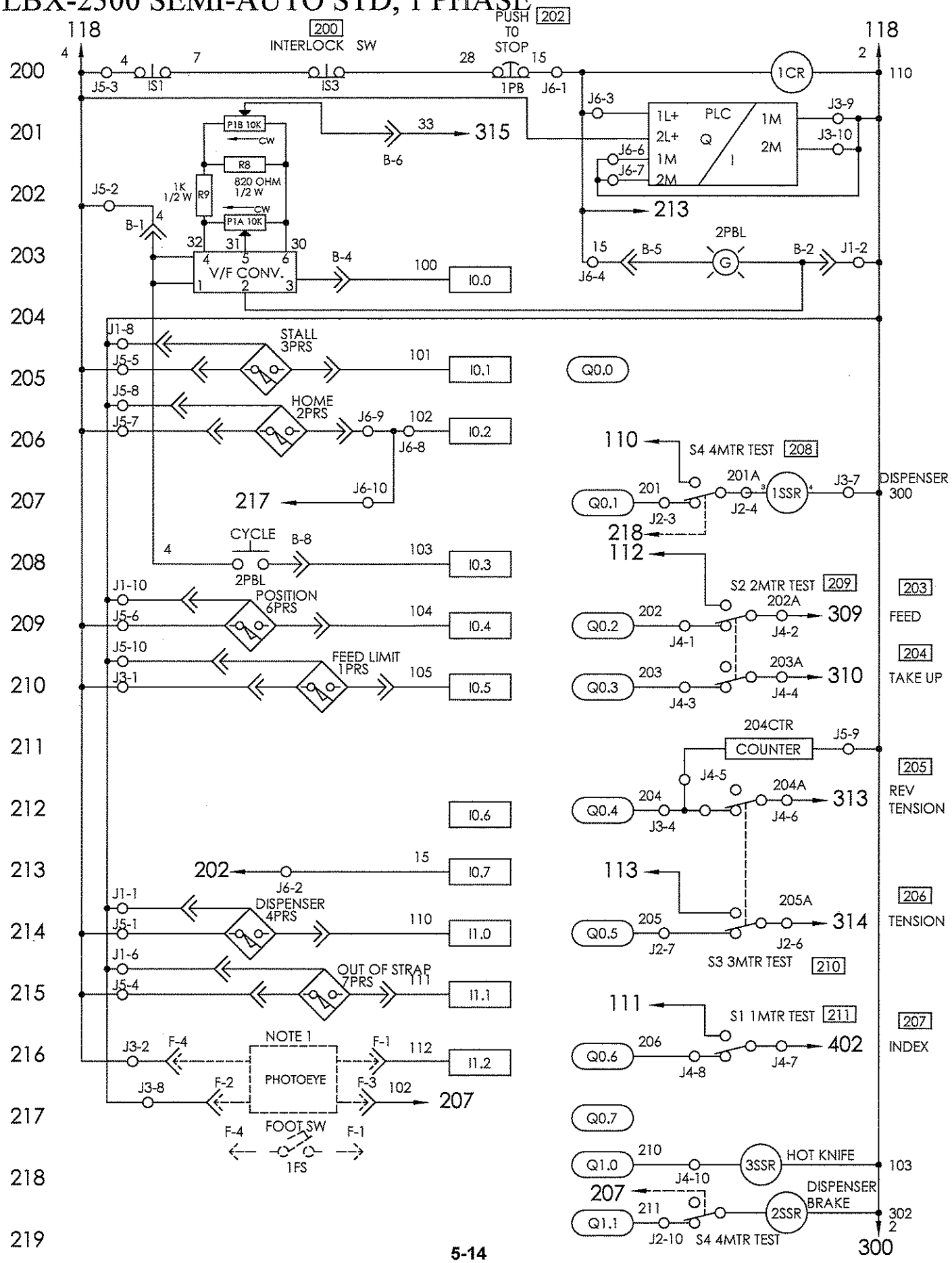

ELECTRICAL SCHEMATIC 100

519337-2

LBX-2300 SEMI-AUTO STD, 1 PHASE

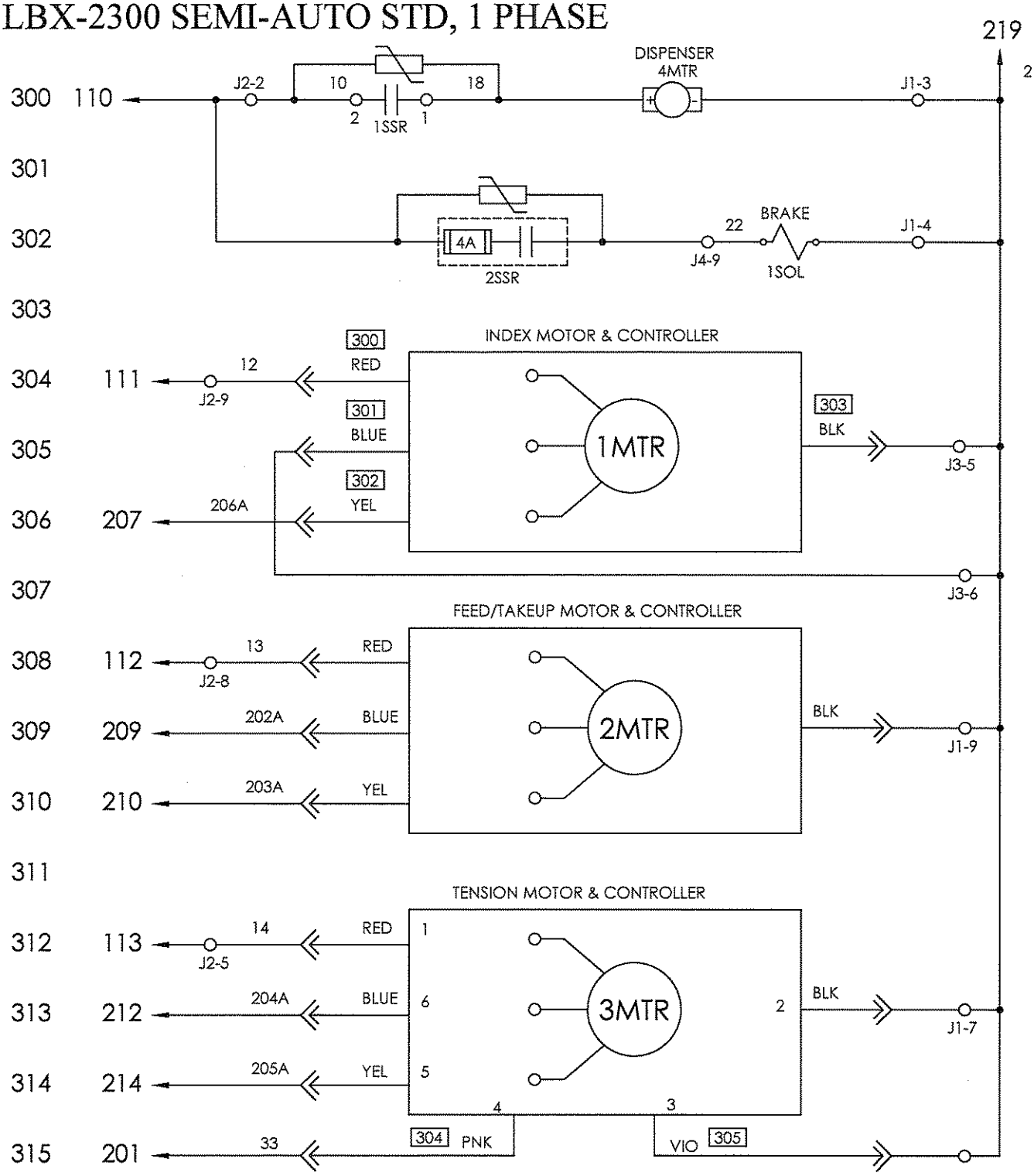

ELECTRICAL SCHEMATIC [100]
LBX-2300 SEMI-AUTO STD, 1 PHASE

519337-2

400

401

402

403

404

405

406

407

408

409

410

411

412

413

414

415

416

417

418

419

NOTE:
5 & 10
THE COOLEST AND
1 & 6
THE WARMEST HOT
KNIFE.

ALTERNATE TRANSFORMER CONNECTION [403]
FOR 230 VAC MACHINES

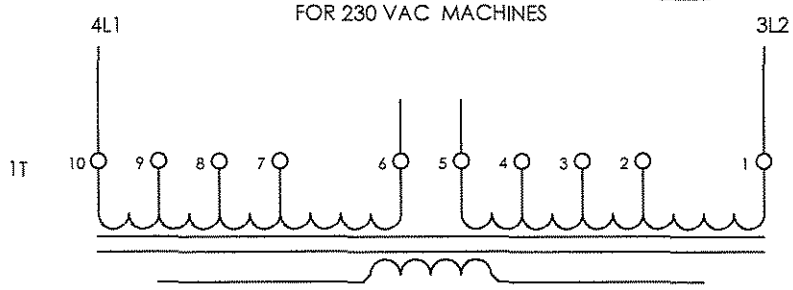

[404]

NOTES:
1 - Components shown with dashed lines are optional.
The foot switch or the photoeye option can not be used simultaneouly.

ELECTRICAL SCHEMATIC 100 519337-2
LBX - 2300 SEMI-AUTO STD, 1 PHASE

100-118		
	Français	**Deutsch**
100	Schéma électrique des connexions	SCHALTPLAN
102	Lame Chaffante	HEIZKEL
103	115 VAC MONTRÉ	abgebildeter Transformator mit Anschluss für 115 VWS
1PS	Alimentation	STROMVERSORGUNG
1T	REMARQUES:5 & 10 est le plus frais & 1& 6 est le chaud le plus chaud Lame Chaffante	ANMERKUNG:5 & 10 IST DAS KÜHLSTE UNDSCHWARZES & 1& 6 IST DAS WÄRMSTE HEISSE HEIZKEL.
2PS	Alimentation PLC Automate	STROMVERSORGUNG PLC
200-218		
	Français	**Deutsch**
200	Interrupteur de verrouillage	Zum Anhalten drücken
202	Presser pour arrêter	STOSS ZU ANSCHLAG
203	MOTEUR DEBIT LIEN	Enschuß
204	MOTEUR DE RAVALEMENT	Rückzugs
205	INVERSION MOTEUR TENSION LIEN	Rückwärts Bandspann Antreib
206	MOTEUR TENSION LIEN	Bandspann Antreib
207	MOTEUR DE TETE DE CERCLAGE	Aggregat
208	S4 4MTR ESSAI	S4 4MTR TEST
209	S2 2MTR ESSAI	S2 2MTR TEST
210	S3 3MTR ESSAI	S3 3MTR TEST
211	S1 1MTR ESSAI	S1 1MTR TEST
3PRS	FIN DE RAVALEMENT	Stillstand
2PRS	TETE EN P.O.	Grundstellung
2PBL	DEPARTE CYCLE	Fußschalter
6PRS	DETECTEUR DE PROXIMITE	Position
1PRS	FIN DE DEBIT	Einlauf Ende
4PRS	ACCUMULATEUR LIEN	Zufuhr
7PRS	HORS DE LA LIEN	Aus Spule heraus
1SSR	MOTEUR DEVIDOIR	Bandspeicher
204CTR	COMPTEUR	Zähler
PHOTOEYE	PHOTO-OEIL	Foto-Auge
1FS	PIED COMMUTATEUR	Fuß Schalter
3SSR	LAME CHAFFANTE	Heiß Heizkel
2SSR	FREIN DE DEVIDIOR	Bandspeicher Bremse
1FS	PIED COMMUTATEUR	Fuß Schalter

ELECTRICAL SCHEMATIC 100 519337-2
LBX - 2300 SEMI-AUTO STD, 1 PHASE

300-318		
	Français	**Deutsch**
300	ROUGE	Rot
301	BLEU	Blau
302	JAUNE	Gelb
303	NOIR	Schwarz
304	PNK	Pink
305	VIO	Violett
4MTR	DISTRIBUTEUR	Bandspeicher
1SOL	FREIN	Bremse
1MTR	MOTEUR DE TETE DE CERCLAGE & COMMANDE	Aggregatmotor & Steuerung
2MTR	MOTEUR DEBIT LIEN & COMMANDE	Einschußmotor-Rückzugsmotor & Steuerung
3MTR	MOTEUR TENSION LIEN & COMMANDE	Bandspann-Antreib & Steuerung
400-418		
	Français	**Deutsch**
403	RACCORDEMENTS ALTERNATIFS DE TRANSFORMATEUR DE COMMANDE	Alternative steuerung transformator anschlüsse
404	REMARQUES: 1 - Composants montré avec à tiret lignes soyez facultatif. Le pied commutateur ou photo-oeil option ne peut pas être utilisé simultanément.	ANMERKUNGEN: 1 - Bestandteile dargestellt mit gestrichelt linien seien wahlweise wahl. Der Fuß schalter oder foto-auge wahl können nicht verwendet gleichzeitig.

115/230 VOLT ELECTRICAL CONTROLS, 1PH.

519338-1

KEY	QTY.	PART NO.		DESCRIPTION
		SEMI AUTO	AUTO	
		519339	**519340**	
1	1	515607	515607	POWER SUPPLY MOUNTING PLATE
2	1	515600	515600	230 VOLT POWER SUPPLY, 3 PH
3	1	515609	515609	POWER SUPPLY DIN RAIL
4	4	170118	170118	M5 X 10 SBHCS (ZINC)
5	17	010076	010076	M5 LOCKWASHER (ZINC)
6	8	171571	171571	M5 FLATWASHER (ZINC)
7	4	272418	272418	M5 X 12 SHCS (FLANGED ZINC)
8	1	070859	070859	GLAND NUT
9	1	434851	434851	CORD GRIP GROMMET, DOMESTIC
	1	434850	434850	CORD GRIP GROMMET, EURO/UK
10	1	515673	515673	CIRCUIT BREAKER, 2 POLE
11	1	014797	014797	1/2" GLAND NUT SLIP RING
12	2	515134	515134	TERMINAL BLOCK
13	1	515602	515602	REAR ELECTRICAL PANEL COVER
14	A/R	435344	435344	ELECTRICAL DOOR GASKET
15	REF	434434	434434	POWER CORD 115V-60HZ-1PH
	REF	434478	434478	POWER CORD 230V-50HZ-1PH UK
	REF	434479	434479	POWER CORD 230V-50HZ-1PH EURO
	REF	434228	434228	POWER CORD 230V-50HZ-1PH AUST
16	1	071940	071940	CORD GRIP
17	4	281015	281015	M6 X 10 SHCS
18	4	481889	481889	M6 LOCKWASHER (ZINC)
19	1	515601	515601	HARNESS RETAINING PLATE
20	1	516283	516283	CONNECTOR PLATE, 3PH
21	9	281532	281532	M5 X 10 SHCS (ZINC)
22	2	436243	436243	INTERLOCK SWITCH
23	4	438295	438295	CORD GRIP PG-9
24	4	011214	011214	M5 X 16 SHCS (ZINC)
25	2	514331	514331	5 WIRE GROMMET HOLDER
26	4	516931	516931	INTERLOCK SWITCH SPACER
N/S	1	519335	519335	MACHINE WIRE HARNESS
N/S	1	515674	515674	POWER HARNESS
27	1	515135	515135	TERMINAL BLOCK GROUND
28	1	515136	515136	END CAP
29	1	515374	NA	CONVEYOR PLUG, HOLE CAP
*N/S	1	515062	515046	SIGN DISPOSITION
N/S	REF	519341	519342	ELECTRICAL SCHEMATIC

* SEE 515037

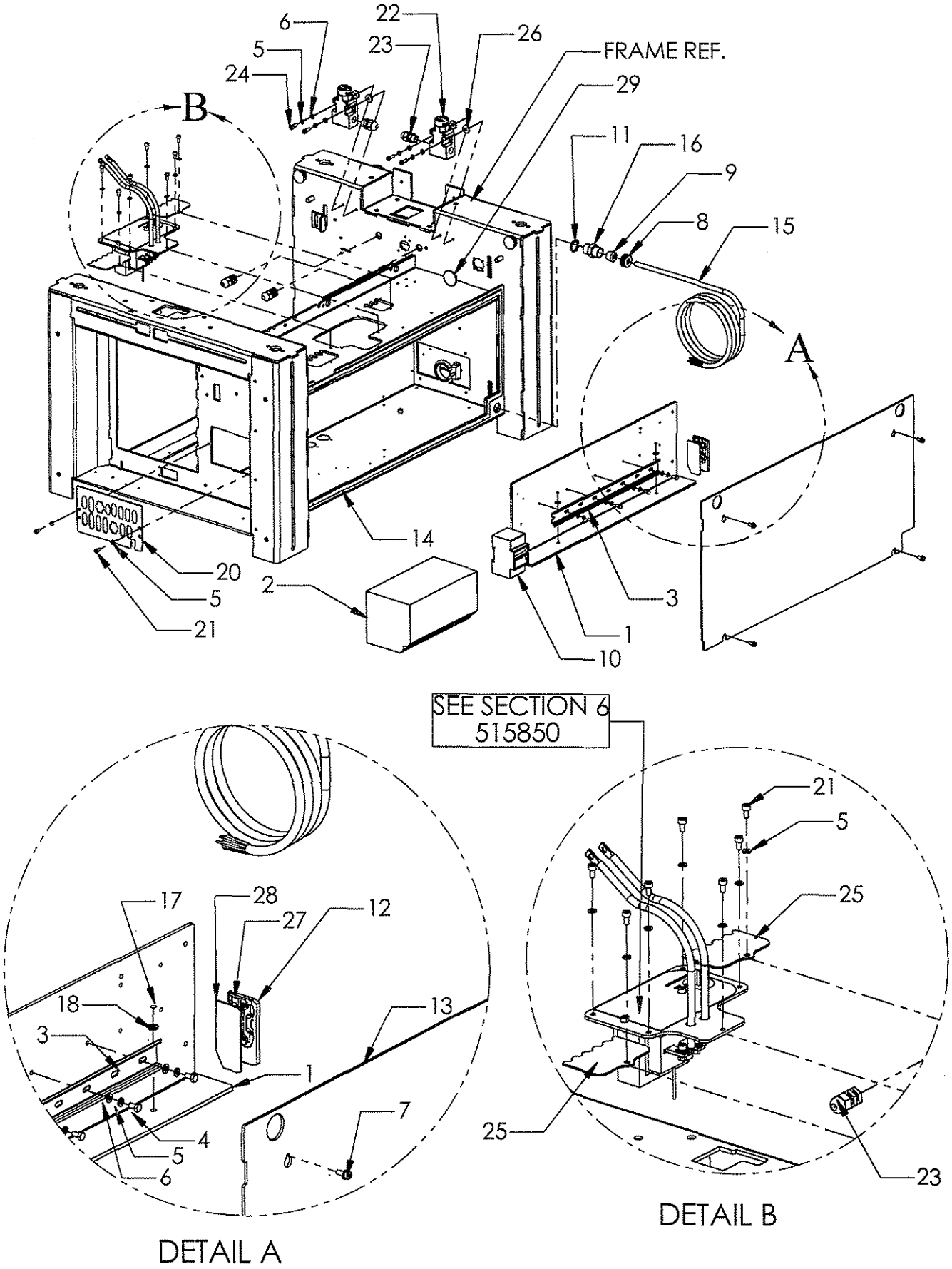
6
5
24
22
23
26
FRAME REF.
29
B
11
16
9
8
15
A
14
20
5
21
2
3
1
10
SEE SECTION 6
515850
21
5
25
17
28
27
12
18
3
13
1
7
4
5
6
25
23
DETAIL A
DETAIL B

115/230 VOLT ELECTRICAL CONTROLS, 1PH.

519338-2

KEY	QTY.	PART NO.		DESCRIPTION
		SEMI AUTO	AUTO	
		519339	**519340**	
1	1	515627	515627	LBX 2300 PLC DIN RAIL
2	1	439433	439433	COUNTER
3	1	439434	439434	MOUNTING PLATE - COUNTER
4	1	438280	438280	FILLER PLATE
5	1	516934	516934	POWER DISCONNECT
6	1	515611	515611	DISCONNECT SWITCH PLATE
7	1	514337	514337	SOLID STATE RELAY (ISSR)
8	1	515610	515610	HIGH/LOW VOLTAGE ACCESS
9	1	515608	515608	HIGH/LOW VOLTAGE SEPARATOR
10	1	515641*	515641*	SIEMENS PLC 40 I/O
11	REF	N/A	W/HARNESS	2 POSITION TOGGLE SWITCH
12	6	162383	162383	M4 X 8 SHCS (ZINC)
13	6	185700	185700	M4 LOCKWASHER HC (ZINC)
14	2	162568	162568	M3 LOCKWASHER (ZINC)
15	2	262551	262551	M3 X 8 SHCS (ZINC)
16	1	434448	434448	VARISTOR - 39 VOLTS
17	1	680466	680466	PAWL LATCH
18	1	516463	516463	SIDE ELECTRICAL DOOR
19	1	516936	516936	RELAY AND FUSE MODULE
20	1	438276	438276	8MM SQ. KEY
21	2	170118	170118	M5 X 10 SBHCS (ZINC)
22	6	281532	281532	M5 X 10 SHCS (ZINC)
23	8	010076	010076	M5 LOCKWASHER (ZINC)
24	2	171571	171571	M5 FLATWASHER (ZINC)
25	7	433919	433919	M6 X 12 SHCS
26	7	010077	010077	M6 LOCKWASHER HC (ZINC)
27	7	515439	515439	NEOPRENE GASKET 3/16" THICK
28	1	515573	516938	CONTROL BOX
29	1	431757	431757	M6 EXT. LW.
30	1	005465	005465	M6 NUT (ZINC)
31	1	515644	N/A	GROMMET
32	1	516454	516454	LATCH CAM (12 - 14 MM)

* SPECIFY PROGRAM NUMBER ALONG WITH PART NUMBER WHEN ORDERING PLC

115/230 VOLT ELECTRICAL CONTROLS, 1PH. 519338-2

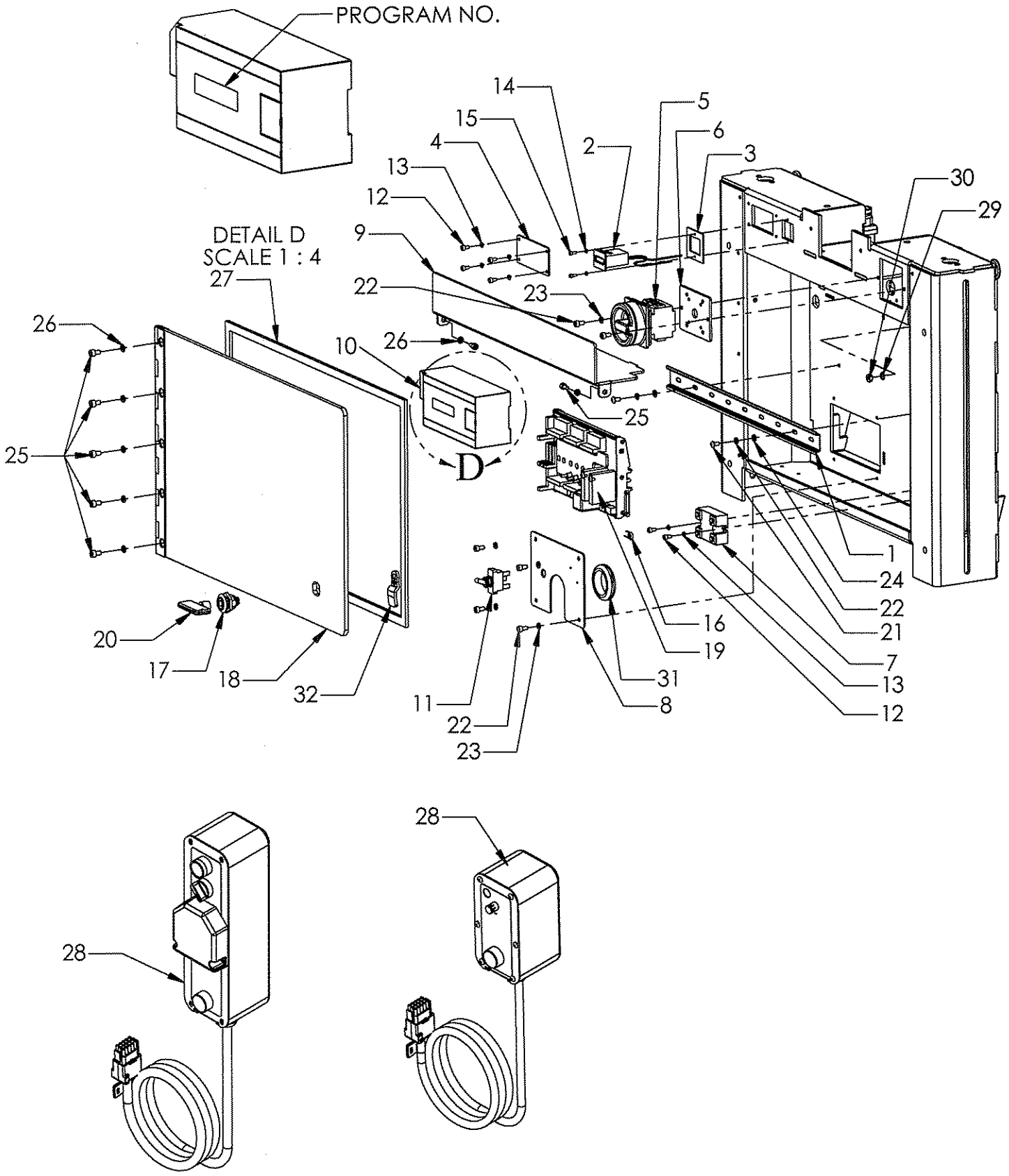

ELECTRICAL SCHEMATIC 100

519341-2

LBX-2300 SEMI-AUTO 1PHASE

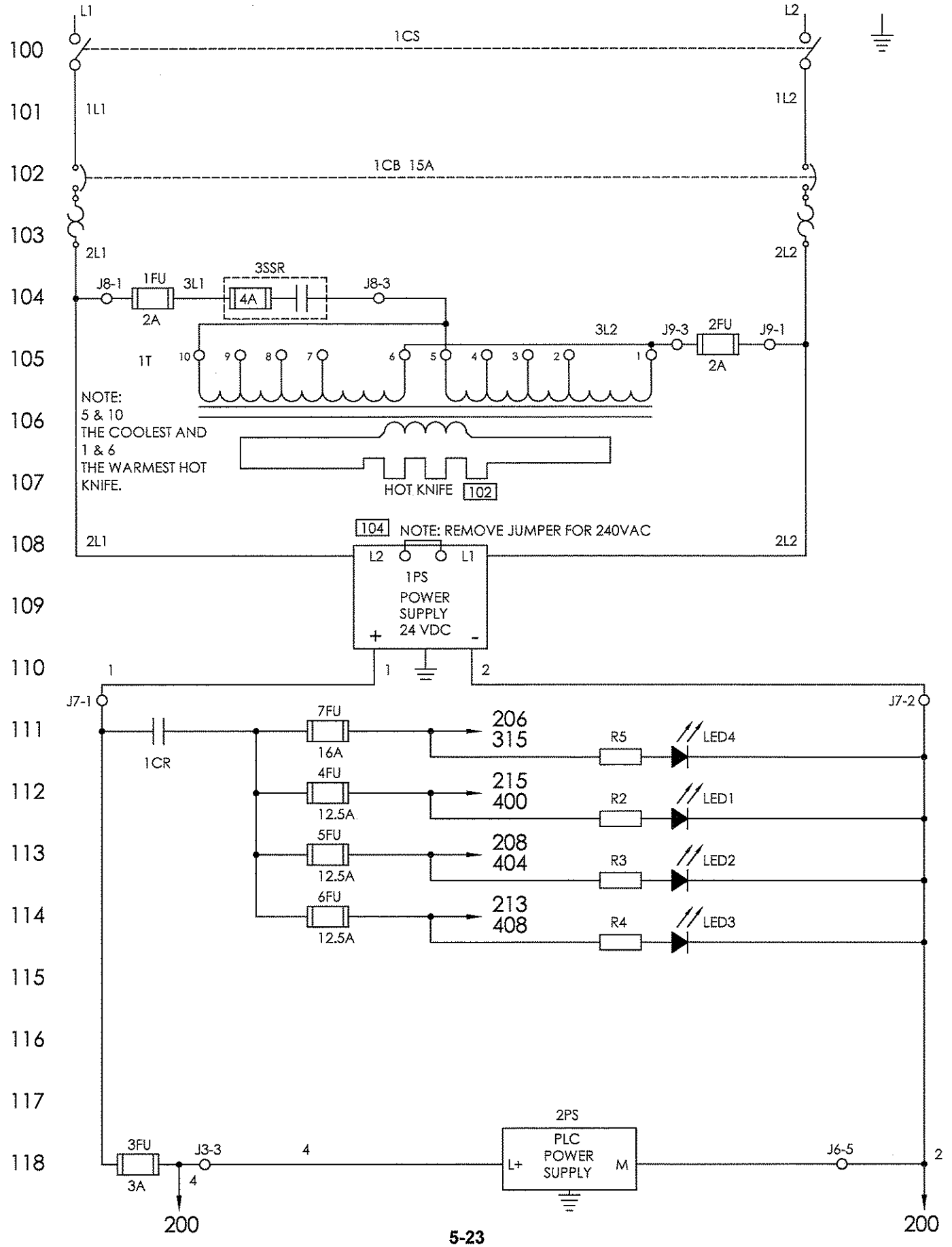

ELECTRICAL SCHEMATIC 100

519341-2

LBX - 2300 SEMI-AUTO 1 PHASE 202

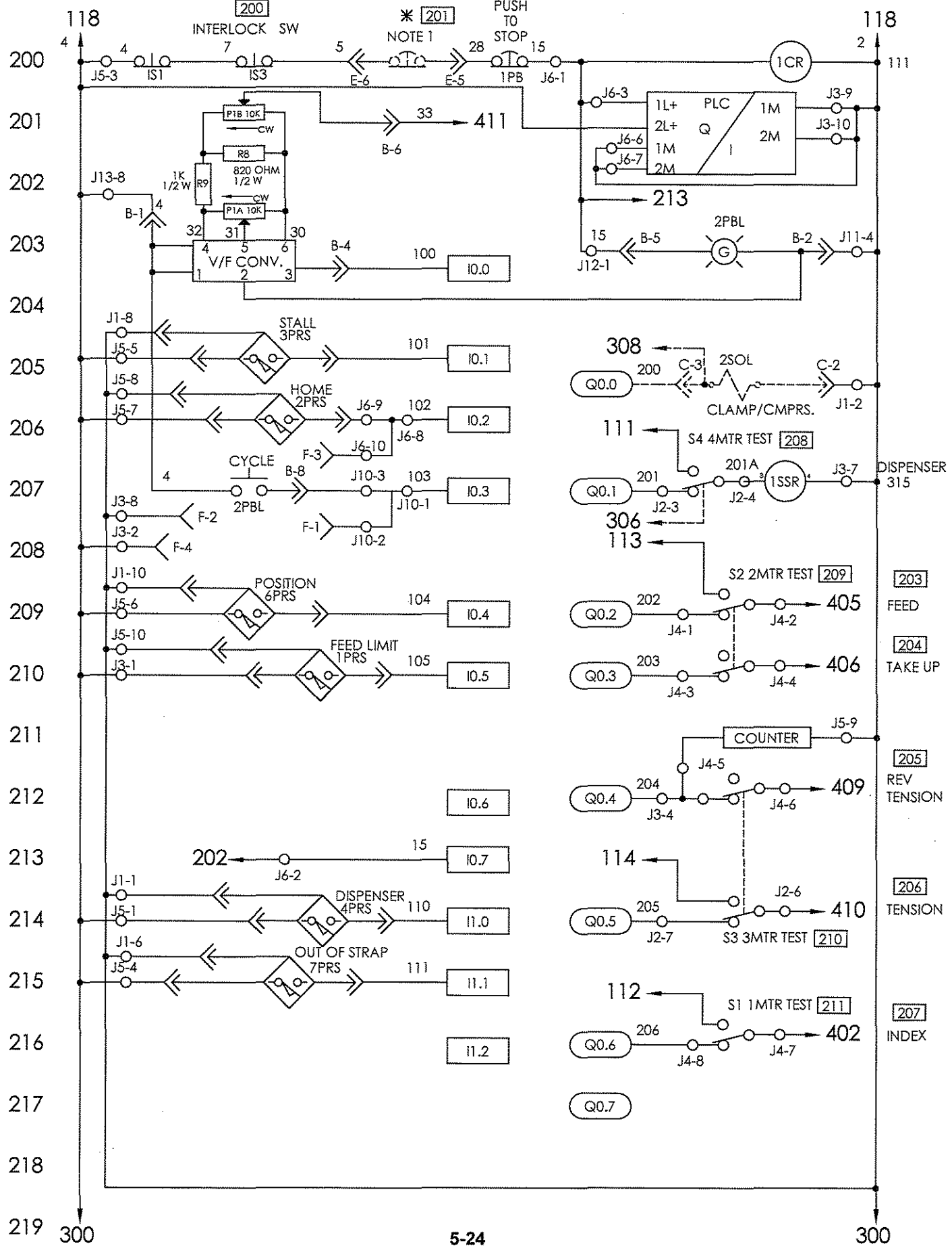

ELECTRICAL SCHEMATIC 100

LBX - 2300 SEMI-AUTO 1 PHASE

519341-2

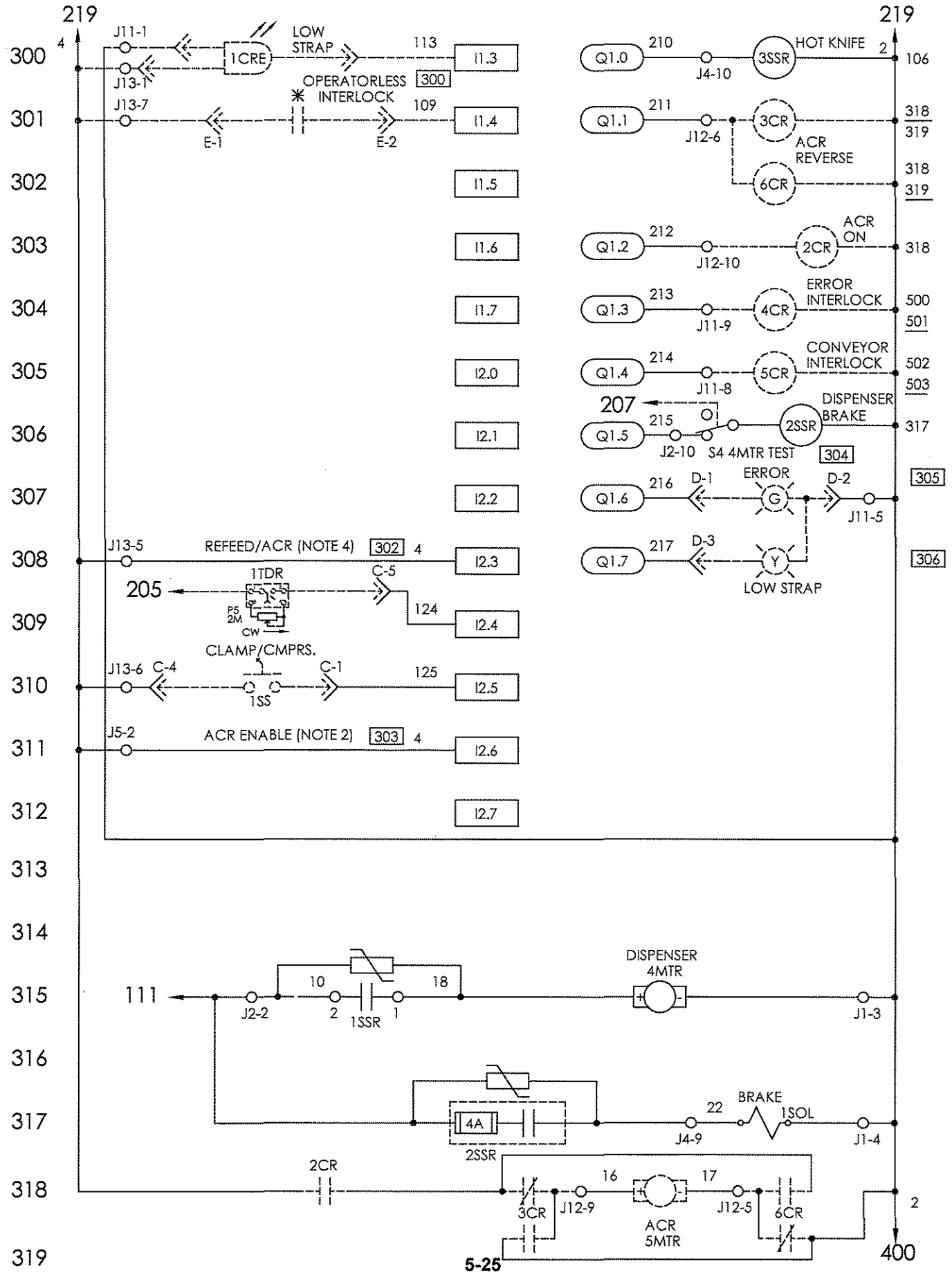

ELECTRICAL SCHEMATIC 100

519341-2

LBX - 2300 SEMI-AUTO 1 PHASE

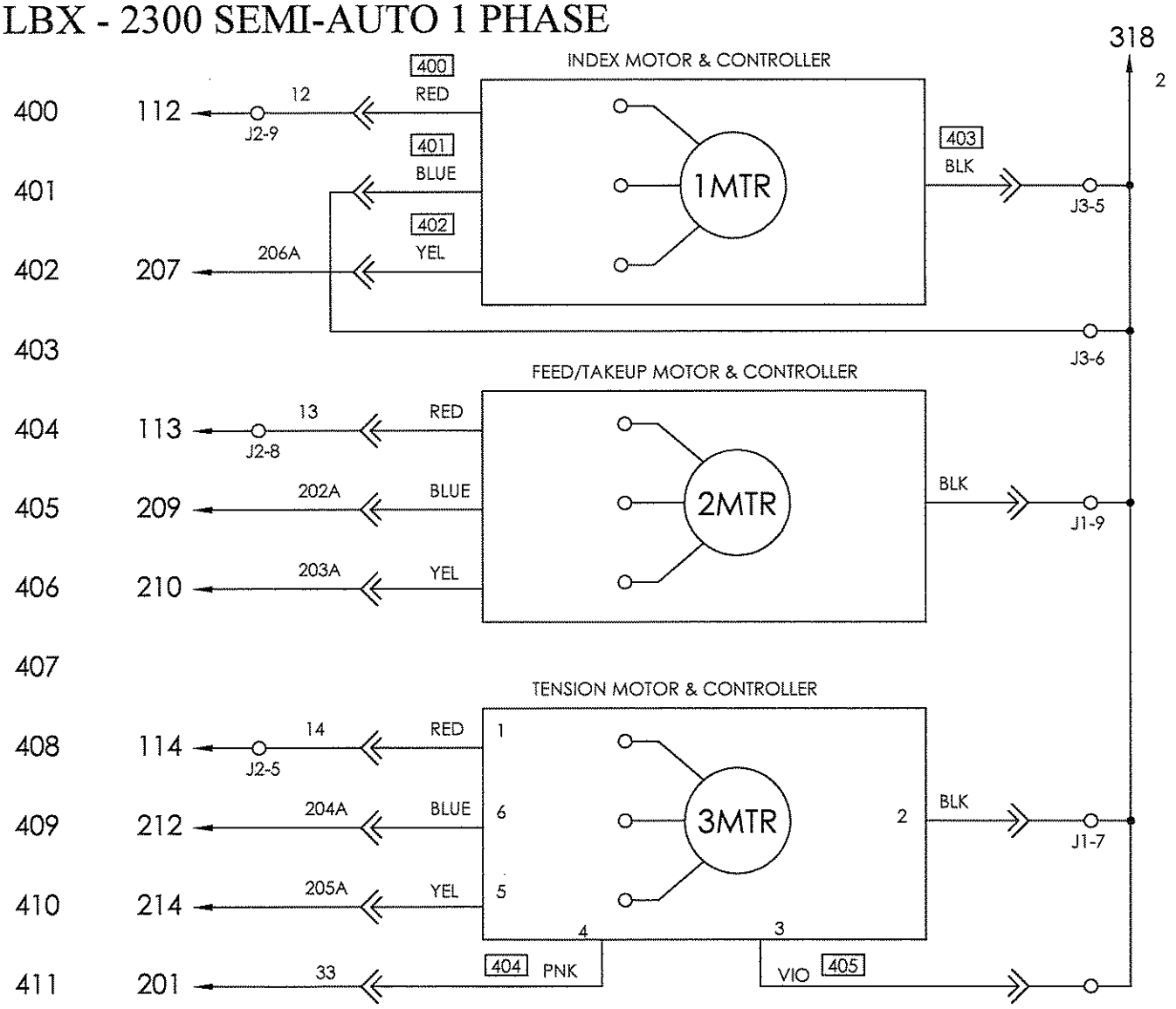

412

413

414

415

416

417

418

419

ELECTRICAL SCHEMATIC [100]
LBX - 2300 SEMI-AUTO 1 PHASE

519341-2

500

501

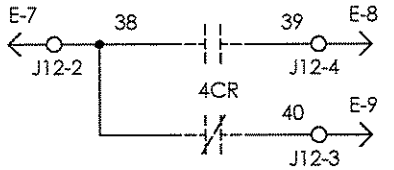

ERROR INTERLOCK [500]
ENERGIZED IF NO ERROR

502

503

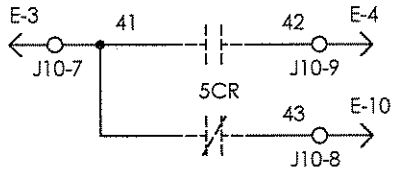

READY TO STRAP [501]
ENERGIZED WHEN READY TO STRAP
DEENERGIZED DURING STRAP CYCLE

504

ALTERNATE TRANSFORMER CONNECTION [503]
FOR 230 VAC MACHINES

505

NOTE:
5 & 10
THE COOLEST AND
1 & 6
THE WARMEST HOT
KNIFE.

506

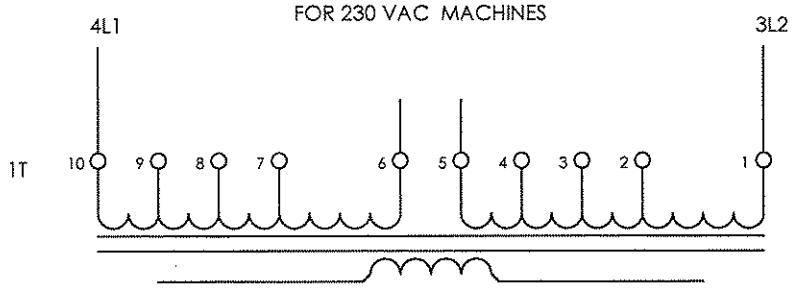

507

508

509

510

511

512

513

514

515

516

[504]

517

NOTES:
* Indicates component supplied by customer.
Components shown with dashed lines are optional.

518

1. Signode supplies jumper as shown. If customer supplies remote E-Stop the jumper must be removed.
2. Connect wire #4 to PLC Input I2.6 to enable Automatic Cutoff and Refeed (ACR) option.
3. N.A
4. Connect wire #4 to PLC Input I2.3 on ACR equiped machines to attempt refeed first then ACR.

ELECTRICAL SCHEMATIC 100 519341-2
LBX - 2300 SEMI-AUTO 1 PHASE

100-118		
	Français	**Deutsch**
100	Schéma électrique des connexions	SCHALTPLAN
102	Lame Chaffante	HEIZKEL
104	REMARQUES: ENLEVEZ CONNEXION POUR 240VAC	ANMERKUNG: ENTFERNEN Sie ANSCHLUSS FÜR 240VAC
1PS	Alimentation	STROMVERSORGUNG
1T	REMARQUES:5 & 10 est le plus frais & 1& 6 est le chaud le plus chaud Lame Chaffante	ANMERKUNG:5 & 10 IST DAS KÜHLSTE UNDSCHWARZES & 1& 6 IST DAS WÄRMSTE HEISSE HEIZKEL.
2PS	Alimentation PLC Automate	STROMVERSORGUNG PLC

200-218		
	Français	**Deutsch**
200	Interrupteur de verrouillage	Zum Anhalten drücken
201	Remarque: 1	ANMERKUNG: 1
202	Presser pour arrêter	STOSS ZU ANSCHLAG
203	MOTEUR DEBIT LIEN	Enschuß
204	MOTEUR DE RAVALEMENT	Rückzugs
205	INVERSION MOTEUR TENSION LIEN	Rückwärts Bandspann Antreib
206	MOTEUR TENSION LIEN	Bandspann Antreib
207	MOTEUR DE TETE DE CERCLAGE	Aggregat
208	S4 4MTR ESSAI	S4 4MTR TEST
209	S2 2MTR ESSAI	S2 2MTR TEST
210	S3 3MTR ESSAI	S3 3MTR TEST
211	S1 1MTR ESSAI	S1 1MTR TEST
3PRS	FIN DE RAVALEMENT	Stillstand
2PRS	TETE EN P.O.	Grundstellung
2PBL	DEPARTE CYCLE	Fußschalter
6PRS	DETECTEUR DE PROXIMITE	Position
1PRS	FIN DE DEBIT	Einlauf Ende
4PRS	ACCUMULATEUR LIEN	Zufuhr
7PRS	HORS DE LA LIEN	Aus Spule heraus
2SOL	BRIDE/COMPRESSION	Kompression
1SSR	MOTEUR DEVIDOIR	Bandspeicher
204CTR	COMPTEUR	Zähler

ELECTRICAL SCHEMATIC 100 519341-2
LBX - 2300 SEMI-AUTO 1 PHASE

300-318		
	Français	**Deutsch**
300	INTERSERRURE	Sperre
302	ACR (REMARQUE: 4)	ACR (Anmerkung: 4)
303	ACR PERMETTEZ (REMARQUE: 2)	ACR Ermöglichen Sie (Anmerkung: 2)
304	S4 4MTR ESSAI	S4 4MTR TEST
305	ERREUR	STÖRUNG
306	BAS LIEN	NIEDRIG BAND
1CRE	LIEN INSUFFISANT	Band knapp
1SS	BRIDE/COMPRESSION	Kompression
3SSR	LAME CHAFFANTE	Heiß Heizkel
3CR,6CR	ACR INVERSE	ACR Rückseite
4CR	ERREUR INTERSERRURE	Störung
5CR	CONVOYEUR INTERSERRURE	Förderwerk Sicherheitskreis
2SSR	FREIN DE DEVIDIOR	Bandspeicher Bremse
4MTR	DISTRIBUTEUR	Bandspeicher
1SOL	FREIN	Bremse
5MTR	ACR	ACR

400-418		
	Français	**Deutsch**
400	ROUGE	Rot
401	BLEU	Blau
402	JAUNE	Gelb
403	NOIR	Schwarz
404	PNK	Pink
405	VIO	Violett
406	CONVOYEUR INVERSE	Förderwerk Rückseite
1MTR	MOTEUR DE TETE DE CERCLAGE & COMMANDE	Aggregatmotor & Steuerung
2MTR	MOTEUR DEBIT LIEN & COMMANDE	Einschußmotor-Rückzugsmotor & Steuerung
3MTR	MOTEUR TENSION LIEN & COMMANDE	Bandspann-Antreib & Steuerung

500-518		
	Français	**Deutsch**
500	INTERSERRURE ERREUR ACTIVÉ SI AUCUNE ERREUR	Störung Sicherheitskreis Eingeschaltet wenn keine Störung
501	COUPLAGE DE CONVOYEUR ACTIVÉ SI CONVOYEUR DESSUS	Förderwerk-Sicherheitskreis eingeschaltet wenn förderwerk funktion
503	RACCORDEMENTS ALTERNATIFS DE TRANSFORMATEUR DE COMMANDE	Alternative steuerung transformator anschlüsse
504	REMARQUE: * Indique le composant fourni par le client. Les composants montrés avec des lignes tirées sont facultatifs. 1. Signode fournit le pullover comme montré. Si le client fournit à distance E-Arrêtez le pullover doit être enlevé. 2. Reliez le fil #4 à Automate(PLC) Entrée I2.6 à permettez Automatique Cutoff an Refeed (ACR) option. 3. N/A 4. Reliez le fil #4 à Automate(PLC) Entrée I2.3 sur ACR équipé des machines pour essayer debit d'abord puis ACR.	ANMERKUNG: * Zeigt an bestandteil geliefert durch kunde. Bestandteile dargestellt mit gestrichelte Linien sind wahlweise freigestellt. 1. Signode versorgungs schließt an wie gezeigt. Wenn kunde versorgungs entfernt E-Anschlag der Überbrücker muß sein entfernt. 2. Schließen Sie an leitung #4 zu PLC Eingang I2.6 ermöglichen Automatisch Abgeschnitten Zufuhr (ACR) wahl. 3. N/A 4. Schließen Sie an leitung #4 zu PLC Eingang I2.3 auf ACR ausgerüstet maschinen zu versuch zufuhr zuerst dann ACR.

ELECTRICAL SCHEMATIC [100]
LBX-2330

519342-3

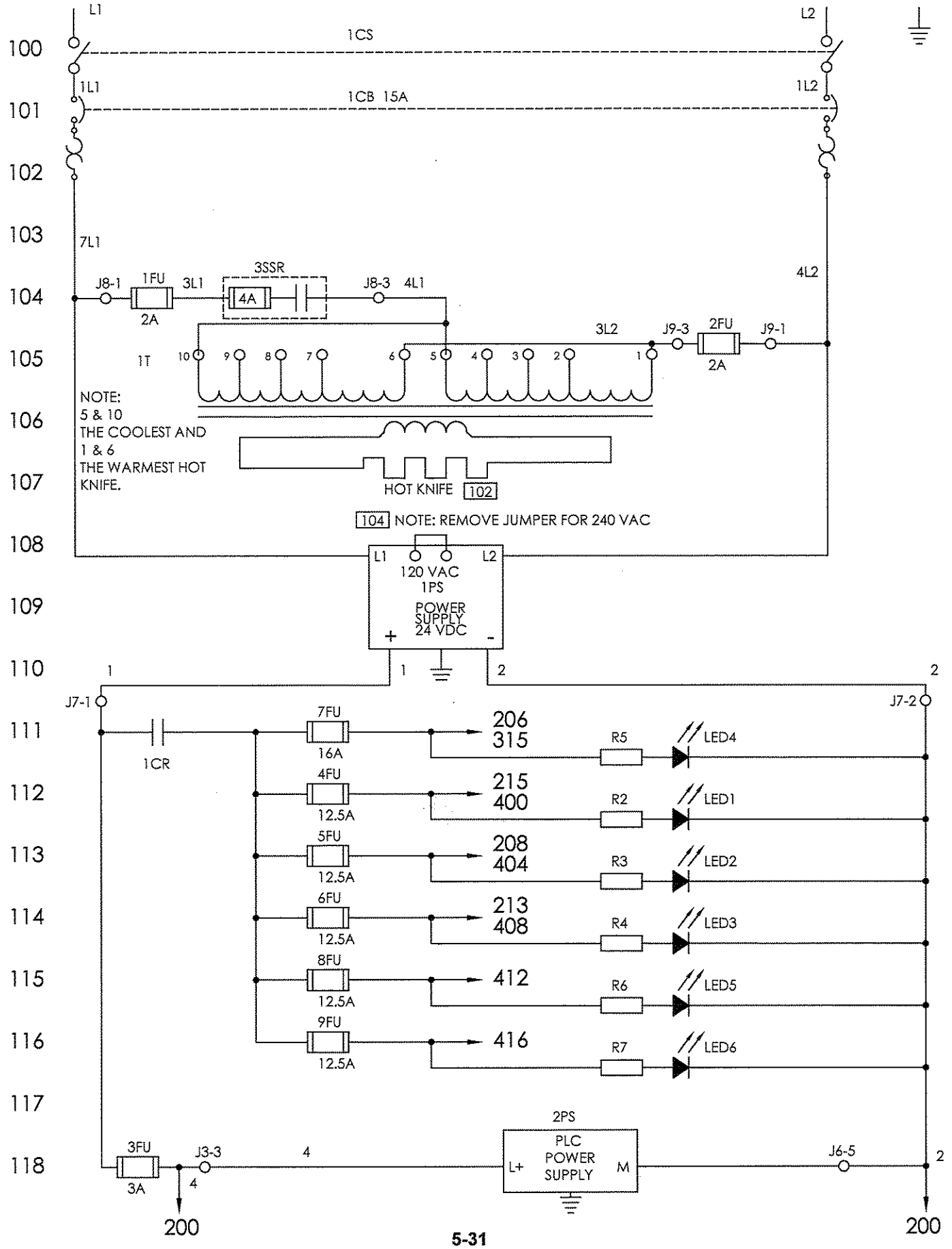

ELECTRICAL SCHEMATIC 100

LBX - 2330

519342-3

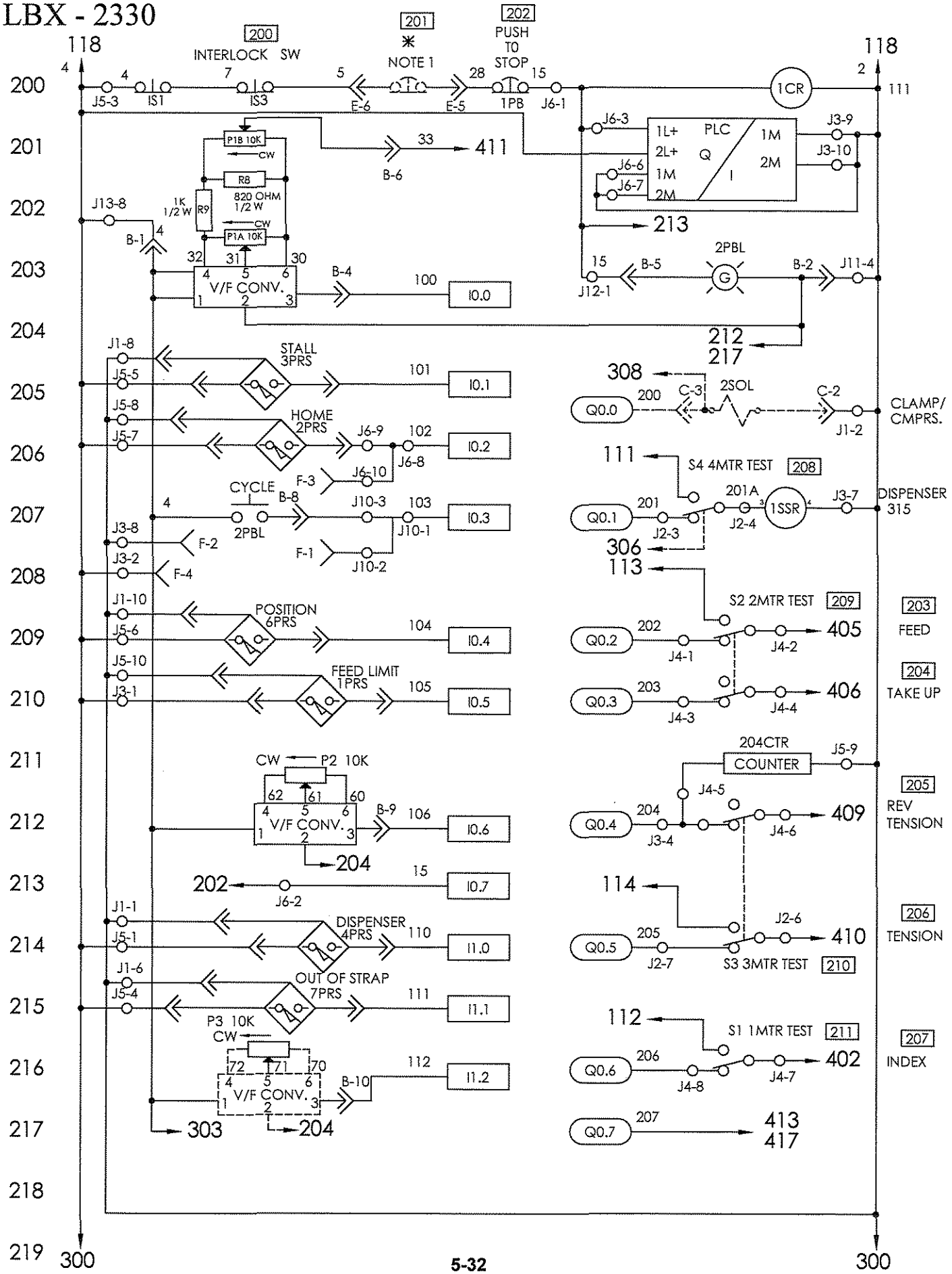

ELECTRICAL SCHEMATIC 100

LBX - 2330

519342-3

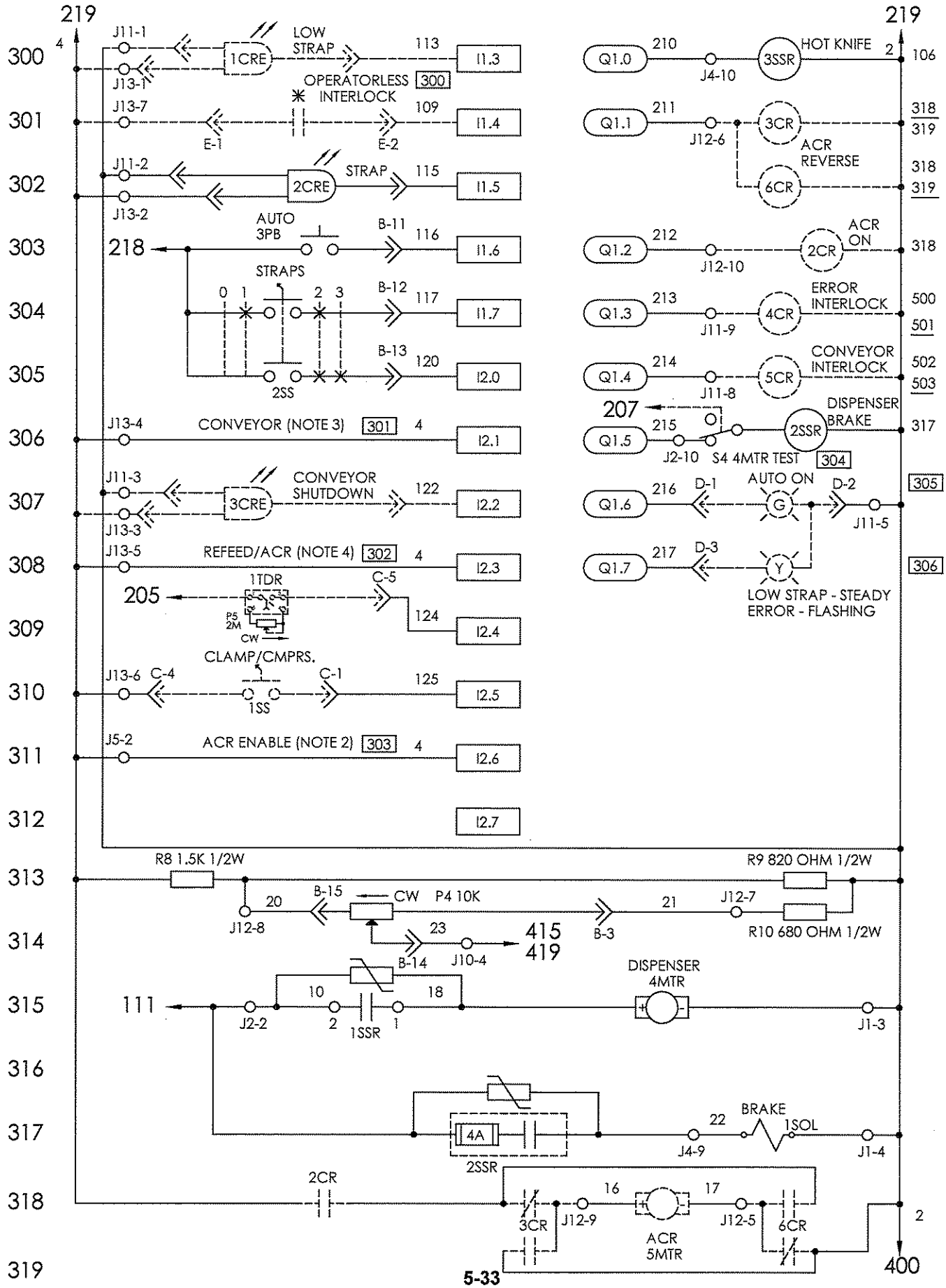

ELECTRICAL SCHEMATIC 100

519342-3

LBX - 2330

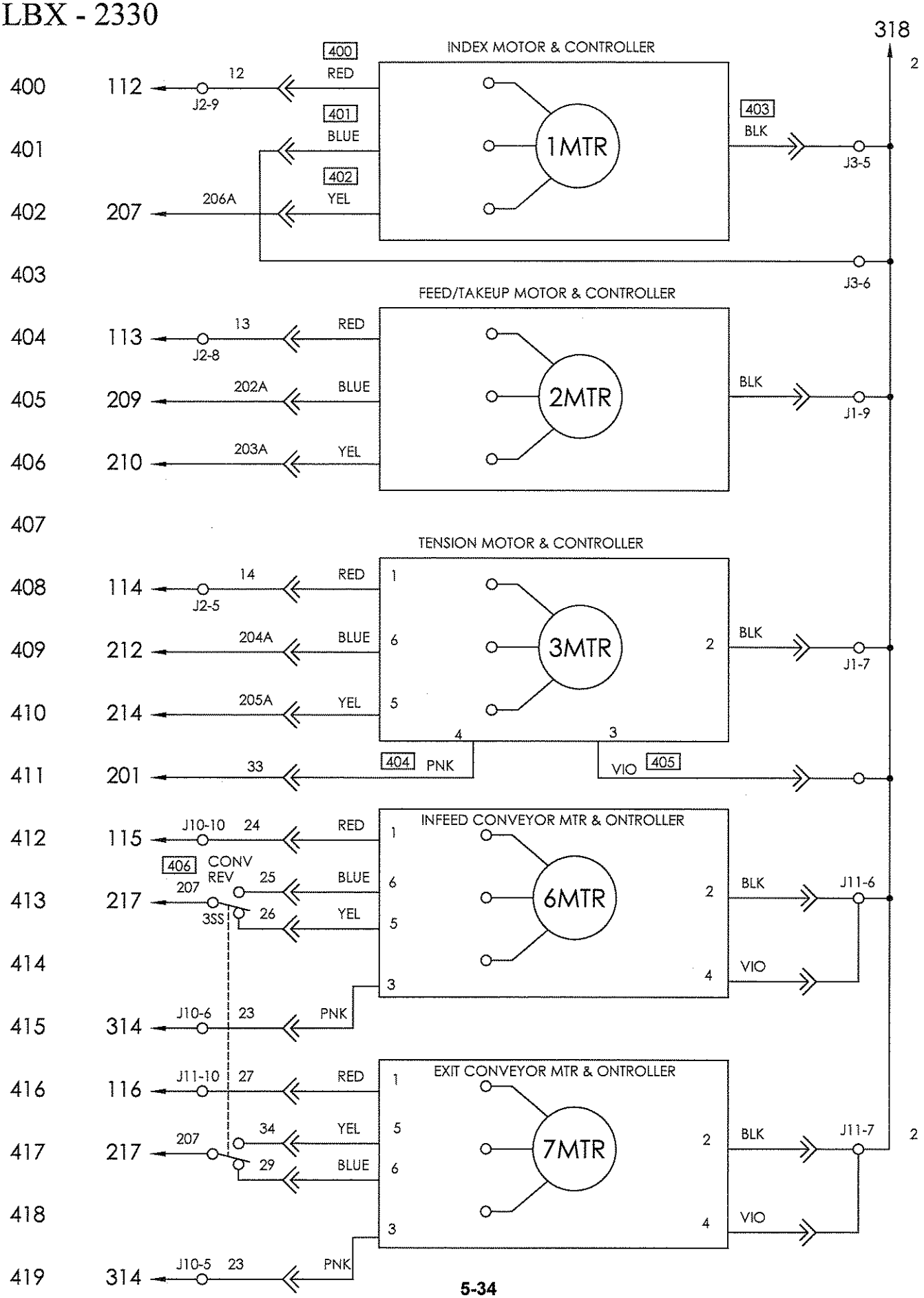

ELECTRICAL SCHEMATIC 100 — 519342-3

LBX - 2330

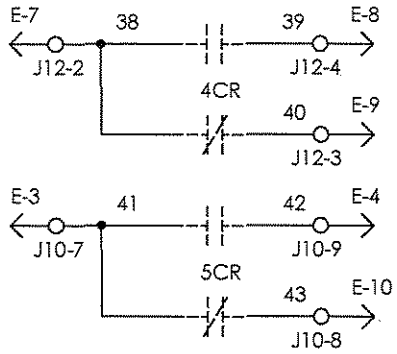

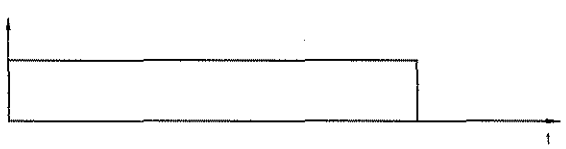

500

ERROR INTERLOCK
ENERGIZED IF NO ERROR

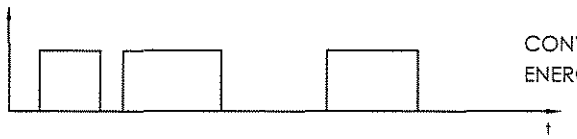

501

CONVEYOR INTERLOCK
ENERGIZED IF CONVEYOR ON

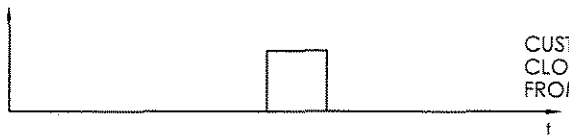

502

CUSTOMER SUPPLIED INHIBIT
CLOSED TO STOP BUNDLES
FROM EXITING STRAPPER

ALTERNATE TRANSFORMER CONNECTION 503
FOR 230 VAC MACHINES

NOTE:
5 & 10
THE COOLEST AND
1 & 6
THE WARMEST HOT
KNIFE.

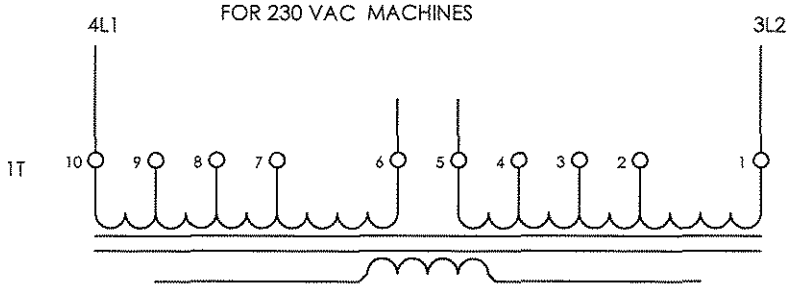

504

NOTES:
* Indicates component supplied by customer.
Components shown with dashed lines are optional.

1. Signode supplies jumper as shown. If customer supplies remote E-Stop the jumper must be removed.
2. Connect wire #4 to PLC Input I2.6 to enable Automatic Cutoff and Refeed (ACR) option.
3. Connect wire #4 to PLC Input I2.1 to run conveyor on error.
4. Connect wire #4 to PLC Input I2.3 on ACR equiped machines to attempt refeed first then ACR.

ELECTRICAL SCHEMATIC 100 519342-3
LBX - 2330

100-118		
	Français	**Deutsch**
100	Schéma électrique des connexions	SCHALTPLAN
102	Lame Chaffante	HEIZKEL
104	REMARQUES: ENLEVEZ CONNEXION POUR 240VAC	ANMERKUNG: ENTFERNEN Sie ANSCHLUSS FÜR 240VAC
1PS	Alimentation	STROMVERSORGUNG
1T	REMARQUES:5 & 10 est le plus frais & 1& 6 est le chaud le plus chaud Lame Chaffante	ANMERKUNG:5 & 10 IST DAS KÜHLSTE UNDSCHWARZES & 1& 6 IST DAS WÄRMSTE HEISSE HEIZKEL.
2PS	Alimentation PLC Automate	STROMVERSORGUNG PLC
200-218		
	Français	**Deutsch**
200	Interrupteur de verrouillage	Zum Anhalten drücken
201	Remarque: 1	ANMERKUNG: 1
202	Presser pour arrêter	STOSS ZU ANSCHLAG
203	MOTEUR DEBIT LIEN	Enschuß
204	MOTEUR DE RAVALEMENT	Rückzugs
205	INVERSION MOTEUR TENSION LIEN	Rückwärts Bandspann Antreib
206	MOTEUR TENSION LIEN	Bandspann Antreib
207	MOTEUR DE TETE DE CERCLAGE	Aggregat
208	S4 4MTR ESSAI	S4 4MTR TEST
209	S2 2MTR ESSAI	S2 2MTR TEST
210	S3 3MTR ESSAI	S3 3MTR TEST
211	S1 1MTR ESSAI	S1 1MTR TEST
3PRS	FIN DE RAVALEMENT	Stillstand
2PRS	TETE EN P.O.	Grundstellung
2PBL	DEPARTE CYCLE	Fußschalter
6PRS	DETECTEUR DE PROXIMITE	Position
1PRS	FIN DE DEBIT	Einlauf Ende
4PRS	ACCUMULATEUR LIEN	Zufuhr
7PRS	HORS DE LA LIEN	Aus Spule heraus
2SOL	BRIDE/COMPRESSION	Kompression
1SSR	MOTEUR DEVIDOIR	Bandspeicher
204CTR	COMPTEUR	Zähler

300-318		
	Français	Deutsch
300	INTERSERRURE	Sperre
301	CONVOYEUR (REMARQUE: 3)	Förderwerk (Anmerkung: 3)
302	ACR (REMARQUE: 4)	ACR (Anmerkung: 4)
303	ACR PERMETTEZ (REMARQUE: 2)	ACR Ermöglichen Sie (Anmerkung: 2)
304	S4 4MTR ESSAI	S4 4MTR TEST
305	AUTO SUR	Auto es ein
306	BAS LIEN- RÉGULIER ERREUR - CLIGNOTANT	Band knapp - Unveränderlich Störung - Blitzen
1CRE	LIEN INSUFFISANT	Band knapp
2CRE	LIEN	Spule
3PB	AUTO	Auto
2SS	SÉLECTEUR DE LIEN	Spulen
3CRE	ARRÊT DE CONVOYEUR	Förderwerk Abschaltung
1SS	BRIDE/COMPRESSION	Kompression
3SSR	LAME CHAFFANTE	Heiß Heizkel
3CR,6CR	ACR INVERSE	ACR Rückseite
4CR	ERREUR INTERSERRURE	Störung
5CR	CONVOYEUR INTERSERRURE	Förderwerk Sicherheitskreis
2SSR	FREIN DE DEVIDIOR	Bandspeicher Bremse
4MTR	DISTRIBUTEUR	Bandspeicher
1SOL	FREIN	Bremse
5MTR	ACR	ACR

400-418		
	Français	Deutsch
400	ROUGE	Rot
401	BLEU	Blau
402	JAUNE	Gelb
403	NOIR	Schwarz
404	PNK	Pink
405	VIO	Violett
406	CONVOYEUR INVERSE	Förderwerk Rückseite
1MTR	MOTEUR DE TETE DE CERCLAGE & COMMANDE	Aggregatmotor & Steuerung
2MTR	MOTEUR DEBIT LIEN & COMMANDE	Einschußmotor-Rückzugsmotor & Steuerung
3MTR	MOTEUR TENSION LIEN & COMMANDE	Bandspann-Antreib & Steuerung
6MTR	ENTRÉE CONVOYEUR MOTEUR ET CONTRÔLEUR	Eingang Förderwerk Mtr. & Steuerpult
7MTR	SORTIE CONVOYEUR MOTEUR ET CONTRÔLEUR	Ausgang Förderwerk Mtr. & Steuerpult

500-518		
	Français	Deutsch
500	INTERSERRURE ERREUR ACTIVÉ SI AUCUNE ERREUR	Störung Sicherheitskreis Eingeschaltet wenn keine Störung
501	COUPLAGE DE CONVOYEUR ACTIVÉ SI CONVOYEUR DESSUS	Förderwerk-Sicherheitskreis eingeschaltet wenn förderwerk funktion
502	LE CLIENT FOURNI EMPÊCHENT FERMÉ POUR ARRÊTER DES PAQUETS DE SORTIR STRAPPER	Kunde geliefert sperre Geschlossen, um zu stoppen bündel von herausnehmen bügeler
503	RACCORDEMENTS ALTERNATIFS DE TRANSFORMATEUR DE COMMANDE POUR 230 VCA MACHINES	Alternative steuerung transformator anschlüsse für 230 VAC maschinen
504	REMARQUE: * Indique le composant fourni par le client. Les composants montrés avec des lignes tirées sont facultatifs. 1. Signode fournit le pullover comme montré. Si le client fournit à distance E-Arrêtez le pullover doit être enlevé. 2. Reliez le fil #4 à Automate(PLC) Entrée I2.6 à permettez Automatique Cutoff an Refeed (ACR) option. 3. Reliez le fil #4 à Automate(PLC) Entrée I2.1 pour courir le convoyeur sur l'erreur. 4. Reliez le fil #4 à Automate(PLC) Entrée I2.3 sur ACR équipé des machines pour essayer debit d'abord puis ACR.	ANMERKUNG: * Zeigt an bestandteil geliefert durch kunde. Bestandteile dargestellt mit gestrichelte Linien sind wahlweise freigestellt. 1. Signode versorgungs schließt an wie gezeigt. Wenn kunde versorgungs entfernt E-Anschlag der Überbrücker muß sein entfernt. 2. Schließen Sie an leitung #4 zu PLC Eingang I2.6 ermöglichen Automatisch Abgeschnitten Zufuhr (ACR) wahl. 3. Schließen Sie an leitung #4 zu PLC Eingang I2.1 zu laufen förderwerk auf Störung. 4. Schließen Sie an leitung #4 zu PLC Eingang I2.3 auf ACR ausgerüstet maschinen zu versuch zufuhr zuerst dann ACR.

ELECTRICAL CONTROLS		SEMI-AUTO		SEMI-AUTO		SEMI-AUTO		AUTO		AUTO		AUTO	
		208/230 V		400/460 V		575 V		208/230 V		400/460 V		575V	
BILL OF MATERIAL		**519344**		**519345**		**519346**		**519347**		**519348**		**519349**	
KEY	DESCRIPTION	QTY	P/N	QTY	P/N	QTY	P/N	QTY	P/N	QTY	P/N	QTY	P/N
1	POWER SUPPLY MOUNTING PLATE	1	515607	1	515607	1	515607	1	515607	1	515607	1	515607
2	POWER SUPPLY	1	515600	1	515604	1	515600	1	515600	1	515604	1	515600
3	POWER SUPPLY DIN RAIL	1	515609	1	515609	1	515609	1	515609	1	515609	1	515609
4	M5X10 SBHCS (ZINC)	8	170118	8	170118	4	170118	8	170118	8	170118	4	170118
5	M5 LOCKWASHER (ZINC)	21	010076	21	010076	17	010076	21	010076	21	010076	17	010076
6	M5 FLATWASHER (ZINC)	12	171571	12	171571	8	171571	12	171571	12	171571	8	171571
7	M5X12 SHCS (FLANGED ZINC)	4	272418	4	272418	4	272418	4	272418	4	272418	4	272418
8	1/2" GLAND NUT/SLIP RING	1	070859	1	070859	1	070859	1	070859	1	070859	1	070859
9	GROMMET (3PH DOM/EURO)	1	084863	1	084863	1	084863	1	084863	1	084863	1	084863
10	CIRCUIT BREAKER, 3POLE	1	515605	1	515605	1	515657	1	515605	1	515605	1	515657
11	TRANSFORMER, 3PH	1	515633	1	515633	1	515643	1	515633	1	515633	1	515643
12	CIRCUIT BREAKER, 2POLE	1	515133	1	515133	1	515656	1	515133	1	515133	1	515656
13	REAR ELECTRICAL PANEL COVER	1	515602	1	515602	1	515602	1	515602	1	515602	1	515602
14	ELECTRICAL DOOR GASKET	A/R	435344	A/R	435344	A/R	435344	A/R	435344	A/R	435344	A/R	435344
15	POWER CORD (3PH 50/60Hz)	1	434841	1	434841	1	434841	1	434841	1	434841	1	434841
16	CORD GRIP	1	071940	1	071940	1	071940	1	071940	1	071940	1	071940
18	M6X10 SHCS	2	281015	2	281015	2	281015	2	281015	3	281015	3	281015
19	M6 LOCKWASHER (ZINC)	2	481889	2	481889	6	481889	2	481889	7	481889	7	481889
21	CONNECTOR PLATE, 3PH	1	516283	1	516283	1	516283	1	516283	1	516283	1	516283
22	M5X10 SHCS (ZINC)	9	281532	9	281532	9	281532	9	281532	9	281532	9	281532
23	INTERLOCK SWITCH	2	436243	2	436243	2	436243	2	436243	2	436243	2	436243
24	CORD GRIP PG-9	4	438295	4	438295	4	438295	4	438295	4	438295	4	438295
25	M5X16 SHCS (ZINC)	4	011214	4	011214	4	011214	4	011214	4	011214	4	011214
26	5 WIRE GROMMET HOLDER	2	514331	2	514331	2	514331	2	514331	2	514331	2	514331
27	INTERLOCK SWITCH SPACER	4	516931	4	516931	4	516931	4	516931	4	516931	4	516931
28	CONVEYOR PLUG HOLE CAP	1	515374	1	515374	1	515374		N/A		N/A		N/A
29	TERMINAL BLOCK GROUND	1	515135	1	515135	1	515135	1	515135	1	515135	1	515135
30	END CAP	1	515136	1	515136	1	515136	1	515136	1	515136	1	515136
31	M6 FLATWASHER (ZINC)		N/A	2	262617	6	262617		N/A	2	262617	6	262617
32	TERMINAL BLOCK		N/A		N/A	2	515134		N/A		N/A	2	515134
33	M6X12 BHCS		N/A		N/A	4	165366		N/A		N/A	4	165366
N/S	MACHINE WIRE HARNESS, 3PH	1	519335	1	519335	1	519335	1	519335	1	519335	1	519335
N/S	POWER HARNESS	1	515145	1	515145	1	516232	1	515145	1	515145	1	516232
*N/S	SIGN DISPOSITION	1	515039	1	515039	1	515646	1	515040	1	515040	1	515647
N/S	ELECTRICAL SCHEMATIC	REF	519350	REF	519350	REF	519351	REF	519352	REF	519352	REF	519353

* SEE 515037

208/230/400/460/575 VOLT 3PH

519343-1

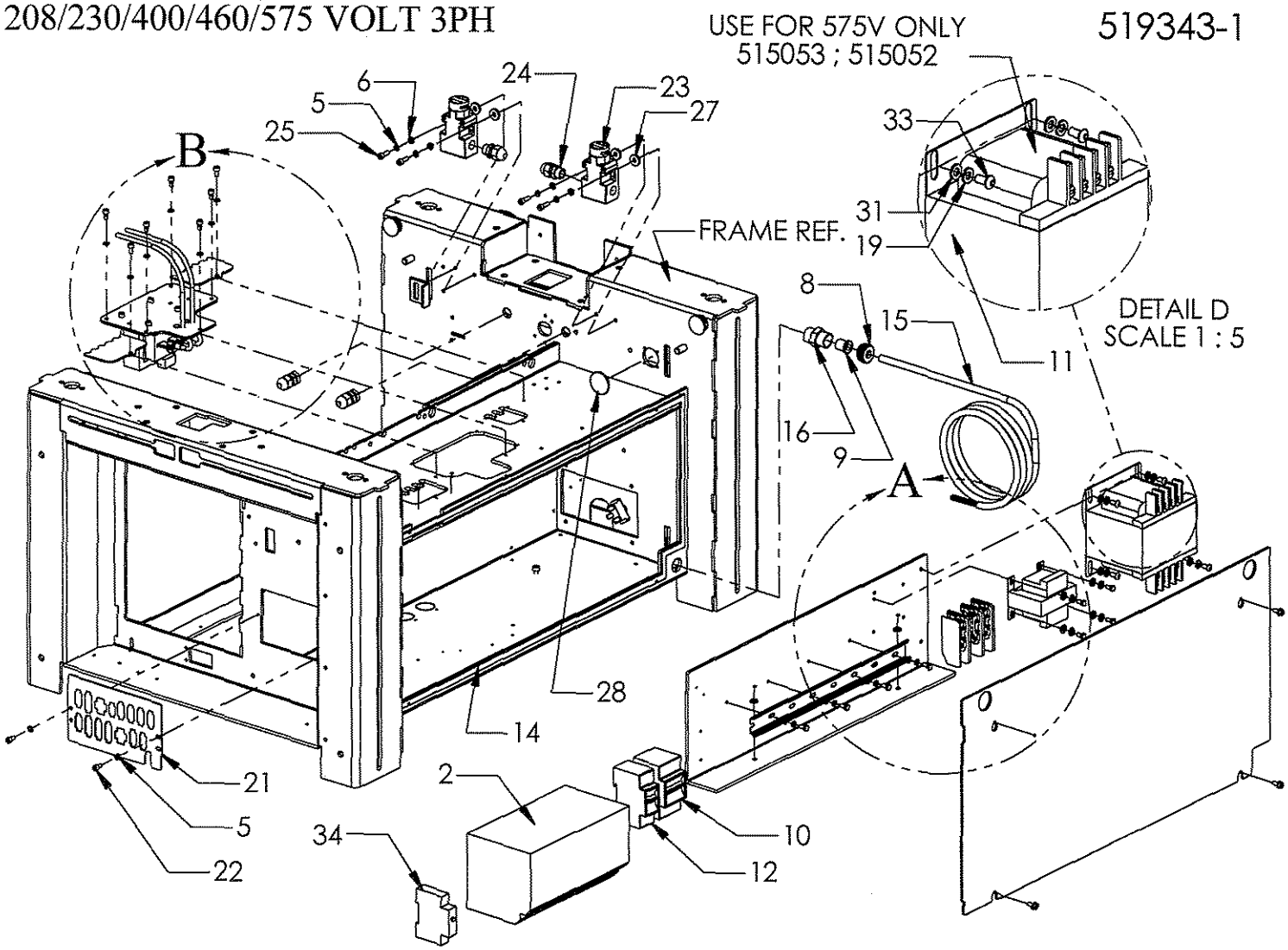

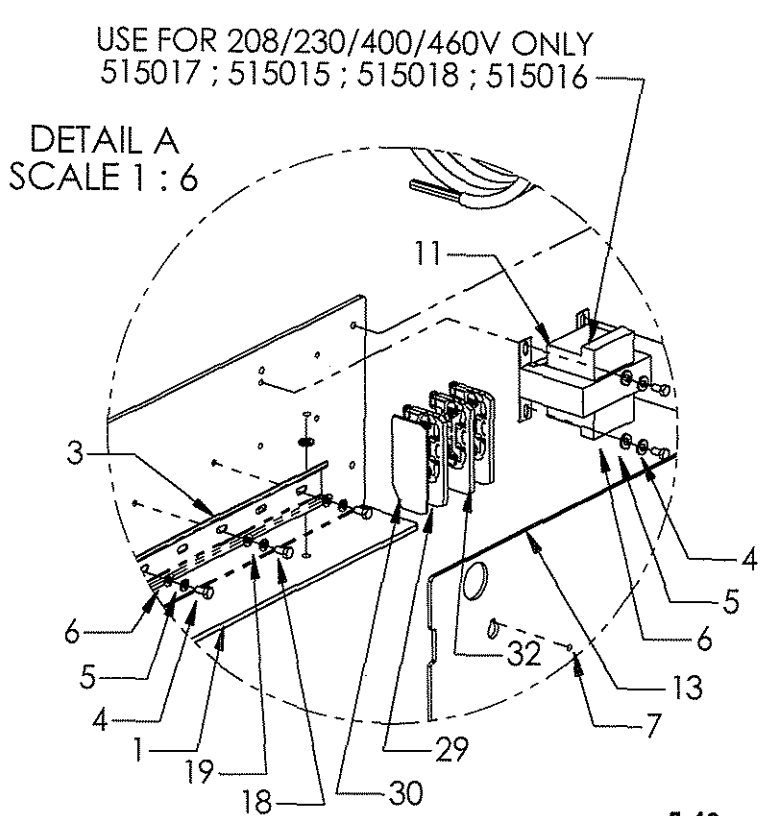

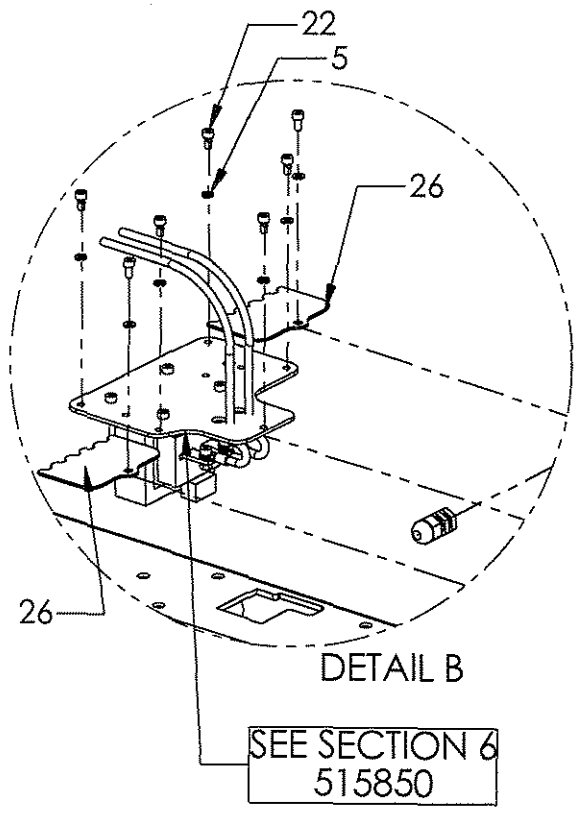

ELECTRICAL CONTROLS		SEMI-AUTO		SEMI-AUTO		SEMI-AUTO		AUTO		AUTO		AUTO	
		208/230 V		400/460 V		575 V		208/230 V		400/460 V		575V	
BILL OF MATERIAL		**519344**		**519345**		**519346**		**519347**		**519348**		**519349**	
KEY	DESCRIPTION	QTY	P/N	QTY	P/N	QTY	P/N	QTY	P/N	QTY	P/N	QTY	P/N
1	LBX 2300 PLC DIN RAIL	1	515627	1	515627	1	515627	1	515627	1	515627	1	515627
2	COUNTER	1	439433	1	439433	1	439433	1	439433	1	439433	1	439433
3	MOUNTING PLATE - COUNTER	1	439434	1	439434	1	439434	1	439434	1	439434	1	439434
4	FILLER PLATE	1	438280	1	438280	1	438280	1	438280	1	438280	1	438280
5	POWER DISCONNECT	1	516934	1	516934	1	516934	1	516934	1	516934	1	516934
6	DISCONNECT SWITCH PLATE	1	515611	1	515611	1	515611	1	515611	1	515611	1	515611
7	SOLID STATE RELAY	1	514337	1	514337	1	514337	1	514337	1	514337	1	514337
8	HIGH/LOW VOLTAGE ACCESS	1	515610	1	515610	1	515610	1	515610	1	515610	1	515610
9	HIGH/LOW VOLTAGE SEPARATOR	1	515608	1	515608	1	515608	1	515608	1	515608	1	515608
10	SIEMENS PLC 40 I/O	1	515641*	1	515641*	1	515641*	1	515641*	1	515641*	1	515641*
11	2 POSITION TOGGLE SWITCH		N/A		N/A		N/A	REF	WHARNESS	REF	WHARNESS	REF	WHARNESS
12	M4 X 8 SHCS (ZINC)	6	162383	6	162383	6	162383	6	162383	6	162383	6	162383
13	M4 LOCKWASHER HC (ZINC)	6	185700	6	185700	6	185700	6	185700	6	185700	6	185700
14	M3 LOCKWASHER (ZINC)	2	162568	2	162568	2	162568	2	162568	2	162568	2	162568
15	M3 X 8 SHCS (ZINC)	2	262551	2	262551	2	262551	2	262551	2	262551	2	262551
16	VARISTOR - 39 VOLTS	1	434448	1	434448	1	434448	1	434448	1	434448	1	434448
17	PAWL LATCH	1	680466	1	680466	1	680466	1	680466	1	680466	1	680466
18	SIDE ELECTRICAL DOOR	1	516463	1	516463	1	516463	1	516463	1	516463	1	516463
19	RELAY AND FUSE MODULE	1	516936	1	516936	1	516936	1	516936	1	516936	1	516936
20	8MM SQ. KEY	1	438276	1	438276	1	438276	1	438276	1	438276	1	438276
21	M5 X 10 SBHCS (ZINC)	2	170118	2	170118	2	170118	2	170118	2	170118	2	170118
22	M5 X 10 SHCS (ZINC)	6	281532	6	281532	6	281532	6	281532	6	281532	6	281532
23	M5 LOCKWASHER (ZINC)	8	010076	8	010076	8	010076	8	010076	8	010076	8	010076
24	M5 FLATWASHER (ZINC)	2	171571	2	171571	2	171571	2	171571	2	171571	2	171571
25	M6 X 12 SHCS	7	433919	7	433919	7	433919	7	433919	7	433919	7	433919
26	M6 LOCKWASHER HC (ZINC)	7	010077	7	010077	7	010077	7	010077	7	010077	7	010077
27	NEOPRENE GASKET 3/16" THICK	7	515439	7	515439	7	515439	7	515439	7	515439	7	515439
28	AUTOMATIC CONV. CONTROL BOX	1	515573	1	515573	1	515573	1	516938	1	516938	1	516938
29	M6 EXT. LW.	1	431757	1	431757	1	431757	1	431757	1	431757	1	431757
30	M6 NUT (ZINC)	1	005465	1	005465	1	005465	1	005465	1	005465	1	005465
31	LATCH CAM (12 - 14 MM)	1	516454	1	516454	1	516454	1	516454	1	516454	1	516454

* SPECIFY PROGRAM NUMBER ALONG WITH PART NUMBER WHEN ORDERING PLC

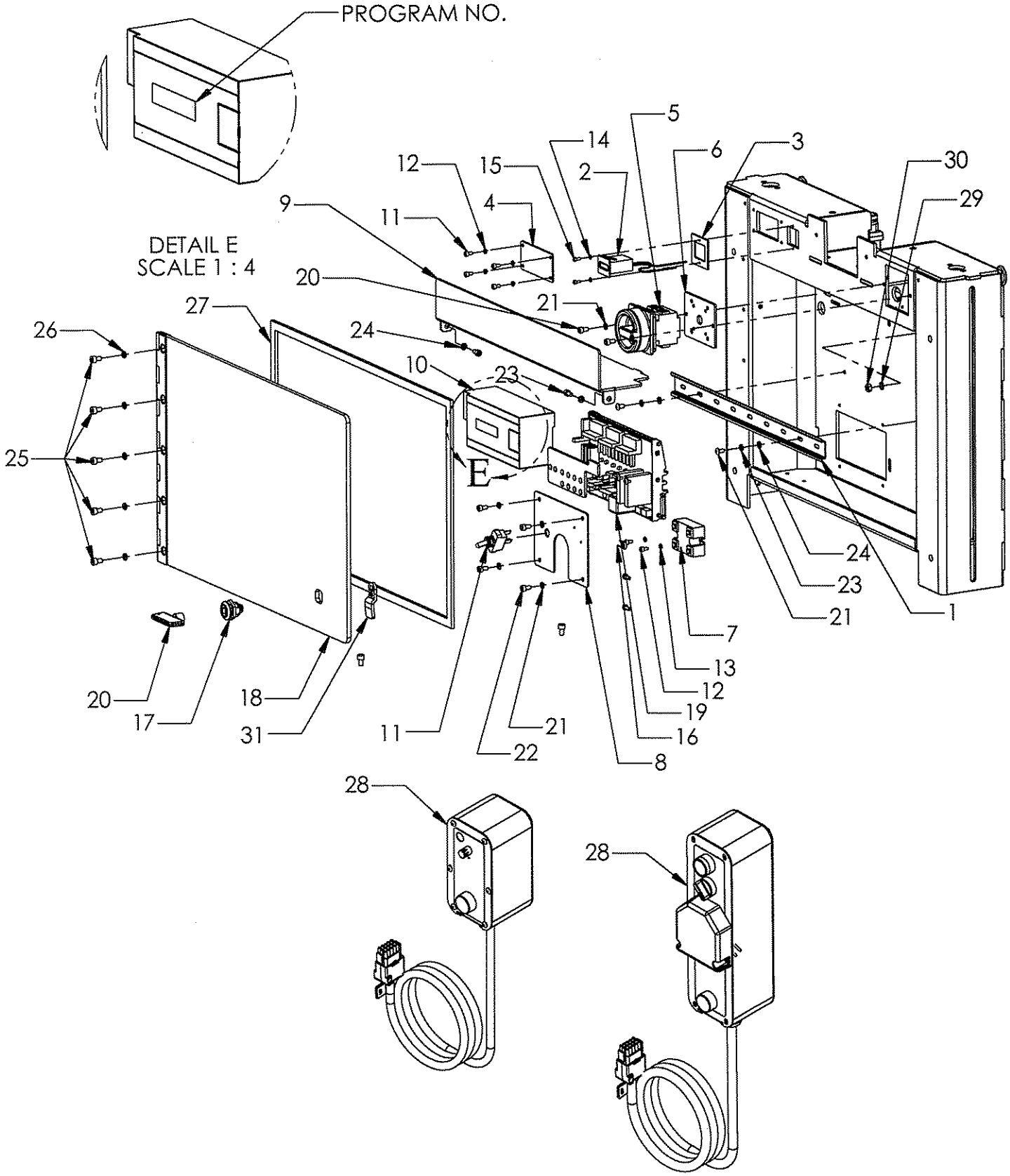
PROGRAM NO.
DETAIL E
SCALE 1 : 4
E
1
2
3
4
5
6
7
8
9
10
11
12
13
14
15
16
17
18
19
20
21
22
23
24
25
26
27
28
29
30
31

ELECTRICAL SCHEMATIC 100
LBX-2300 SEMI-AUTO 3PHASE

519350-2

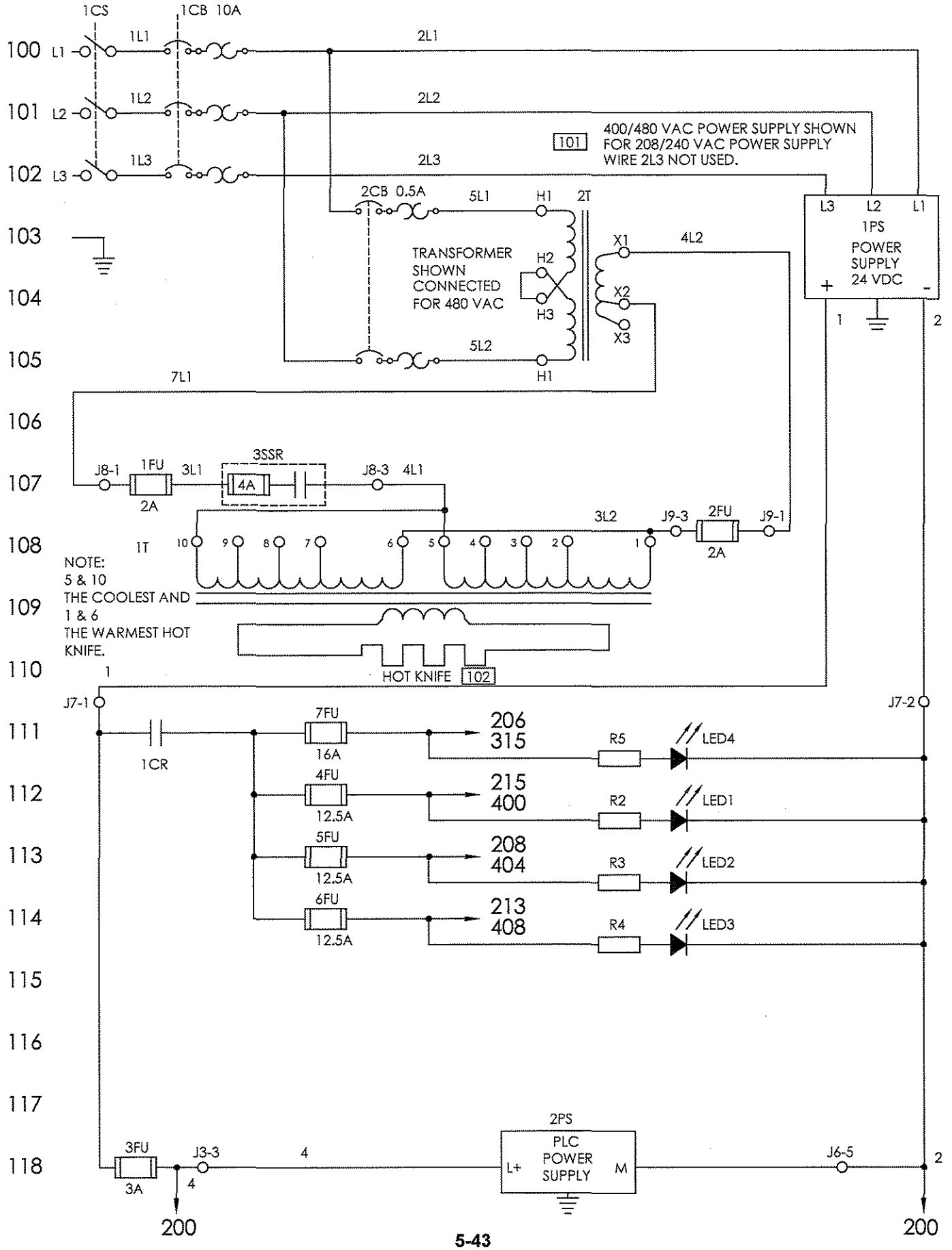

ELECTRICAL SCHEMATIC 100 — 519350-2

LBX - 2300 SEMI-AUTO 3 PHASE 202

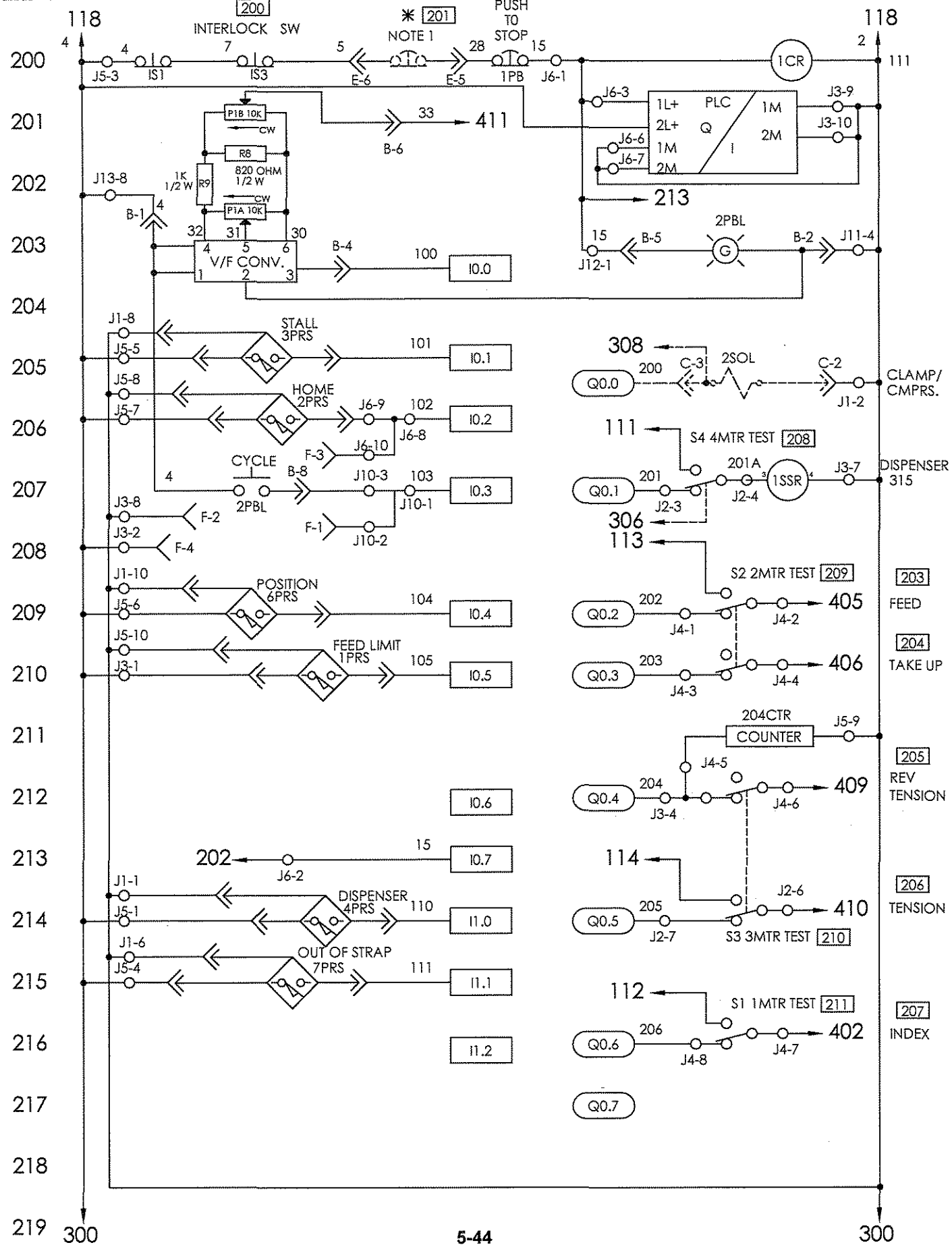

ELECTRICAL SCHEMATIC 100

519350-2

LBX - 2300 SEMI-AUTO 3 PHASE

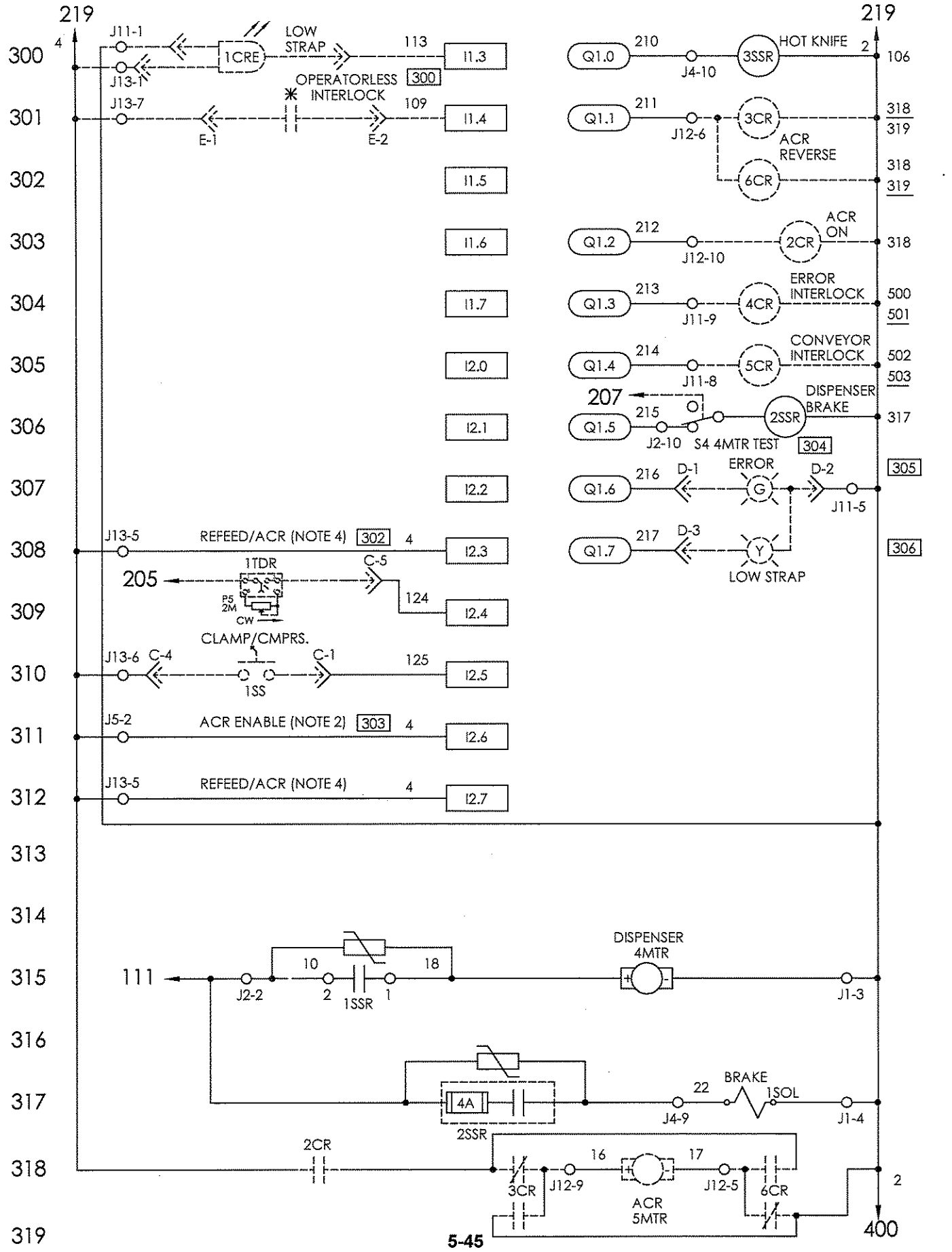

ELECTRICAL SCHEMATIC 100

519350-2

LBX - 2300 SEMI-AUTO 3 PHASE

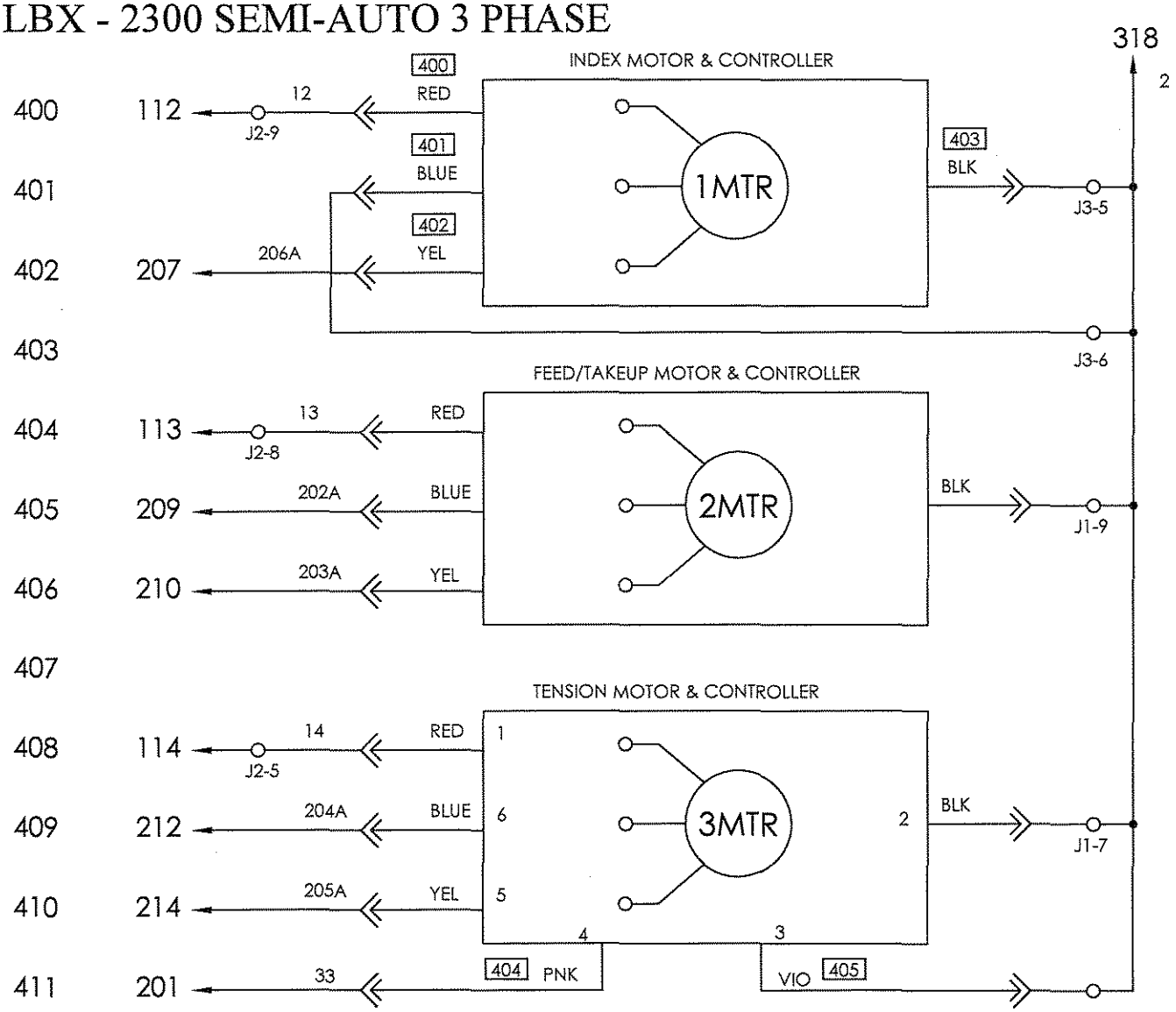

ELECTRICAL SCHEMATIC [100]
LBX - 2300 SEMI-AUTO 3 PHASE

519350-2

500
501
502
503
504
505
506
507
508
509
510
511
512
513
514
515
516
517
518

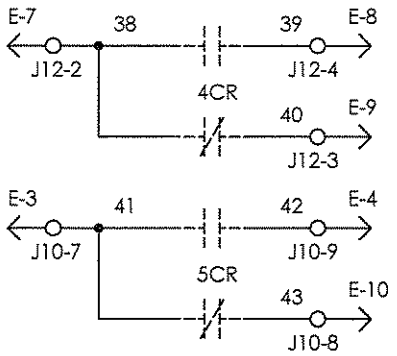

ERROR INTERLOCK [500]
ENERGIZED IF NO ERROR

READY TO STRAP RELAY [501]
ENERGIZED WHEN READY TO STRAP

ALTERNATE CONTROL TRANSFORMER CONNECTIONS [503]

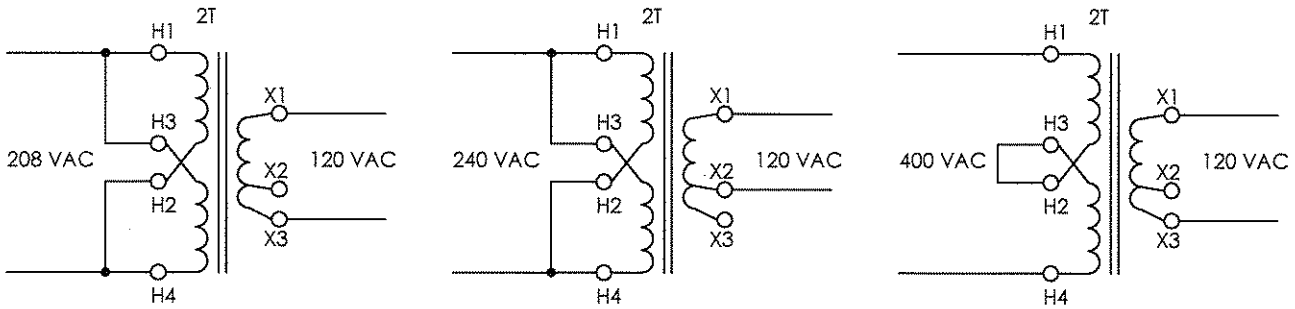

[504]

NOTES:
* Indicates component supplied by customer.
Components shown with dashed lines are optional.

1. Signode supplies jumper as shown. If customer supplies remote E-Stop the jumper must be removed.
2. Connect wire #4 to PLC Input I2.6 to enable Automatic Cutoff and Refeed (ACR) option.
3. N/A
4. Connect wire #4 to PLC Input I2.3 on ACR equiped machines to attempt refeed first then ACR.

ELECTRICAL SCHEMATIC 100 519350-2
LBX - 2300 SEMI-AUTO 3 PHASE

100-118		
	Français	**Deutsch**
100	Schéma électrique des connexions	SCHALTPLAN
101	400/480 V CA ALIMENTATION MONTRÉ POUR 208/240 V CA ALIMENTATION FIL 2L3 NON UTILISÉ.	400/480 VAC STROMVERSORGUNG GEZEIGT FÜR 208/240 VAC STROMVERSORGUNG LEITUNG 2L3 NICHT
102	Lame Chaffante	HEIZKEL
2T	Transformateur représenté avec connexion pour 480 VCA	TRANSFORMATOR DARGESTELLT ANGESCHLOSSEN LEITUNG 480 VAC
1PS	Alimentation	STROMVERSORGUNG
1T	REMARQUES:5 & 10 est le plus frais & 1& 6 est le chaud le plus chaud Lame Chaffante	ANMERKUNG:5 & 10 IST DAS KÜHLSTE UNDSCHWARZES & 1& 6 IST DAS WÄRMSTE HEISSE HEIZKEL.
2PS	Alimentation PLC Automate	STROMVERSORGUNG PLC

200-218		
	Français	**Deutsch**
200	Interrupteur de verrouillage	Zum Anhalten drücken
201	Remarque: 1	ANMERKUNG: 1
202	Presser pour arrêter	STOSS ZU ANSCHLAG
203	MOTEUR DEBIT LIEN	Enschuß
204	MOTEUR DE RAVALEMENT	Rückzugs
205	INVERSION MOTEUR TENSION LIEN	Rückwärts Bandspann Antreib
206	MOTEUR TENSION LIEN	Bandspann Antreib
207	MOTEUR DE TETE DE CERCLAGE	Aggregat
208	S4 4MTR ESSAI	S4 4MTR TEST
209	S2 2MTR ESSAI	S2 2MTR TEST
210	S3 3MTR ESSAI	S3 3MTR TEST
211	S1 1MTR ESSAI	S1 1MTR TEST
3PRS	FIN DE RAVALEMENT	Stillstand
2PRS	TETE EN P.O.	Grundstellung
2PBL	DEPARTE CYCLE	Fußschalter
6PRS	DETECTEUR DE PROXIMITE	Position
1PRS	FIN DE DEBIT	Einlauf Ende
4PRS	ACCUMULATEUR LIEN	Zufuhr
7PRS	HORS DE LA LIEN	Aus Spule heraus
2SOL	BRIDE/COMPRESSION	Kompression
1SSR	MOTEUR DEVIDOIR	Bandspeicher
204CTR	COMPTEUR	Zähler

ELECTRICAL SCHEMATIC 100 519350-2
LBX - 2300 SEMI-AUTO 3 PHASE

300-318		
	Français	**Deutsch**
300	INTERSERRURE	Sperre
302	ACR (REMARQUE: 4)	ACR (Anmerkung: 4)
303	ACR PERMETTEZ (REMARQUE: 2)	ACR Ermöglichen Sie (Anmerkung: 2)
304	S4 4MTR ESSAI	S4 4MTR TEST
305	ERREUR	STÖRUNG
306	BAS LIEN	NIEDRIG BAND
1CRE	LIEN INSUFFISANT	Band knapp
1SS	BRIDE/COMPRESSION	Kompression
3SSR	LAME CHAFFANTE	Heiß Heizkel
3CR,6CR	ACR INVERSE	ACR Rückseite
4CR	ERREUR INTERSERRURE	Störung
5CR	CONVOYEUR INTERSERRURE	Förderwerk Sicherheitskreis
2SSR	FREIN DE DEVIDIOR	Bandspeicher Bremse
4MTR	DISTRIBUTEUR	Bandspeicher
1SOL	FREIN	Bremse
5MTR	ACR	ACR

400-418		
	Français	**Deutsch**
400	ROUGE	Rot
401	BLEU	Blau
402	JAUNE	Gelb
403	NOIR	Schwarz
404	PNK	Pink
405	VIO	Violett
406	CONVOYEUR INVERSE	Förderwerk Rückseite
1MTR	MOTEUR DE TETE DE CERCLAGE & COMMANDE	Aggregatmotor & Steuerung
2MTR	MOTEUR DEBIT LIEN & COMMANDE	Einschußmotor-Rückzugsmotor & Steuerung
3MTR	MOTEUR TENSION LIEN & COMMANDE	Bandspann-Antreib & Steuerung

500-518		
	Français	**Deutsch**
500	INTERSERRURE ERREUR ACTIVÉ SI AUCUNE ERREUR	Störung Sicherheitskreis Eingeschaltet wenn keine Störung
501	COUPLAGE DE CONVOYEUR ACTIVÉ SI CONVOYEUR DESSUS	Förderwerk-Sicherheitskreis eingeschaltet wenn förderwerk funktion
502	LE CLIENT FOURNI EMPÊCHENT FERMÉ POUR ARRÊTER DES PAQUETS DE SORTIR STRAPPER	Kunde geliefert sperre Geschlossen, um zu stoppen bündel von herausnehmen bügeler
503	RACCORDEMENTS ALTERNATIFS DE TRANSFORMATEUR DE COMMANDE	Alternative steuerung transformator anschlüsse
504	REMARQUE: * Indique le composant fourni par le client. Les composants montrés avec des lignes tirées sont facultatifs. 1. Signode fournit le pullover comme montré. Si le client fournit à distance E-Arrêtez le pullover doit être enlevé. 2. Reliez le fil #4 à Automate(PLC) Entrée I2.6 à permettez Automatique Cutoff an Refeed (ACR) option. 3. Reliez le fil #4 à Automate(PLC) Entrée I2.1 pour courir le convoyeur sur l'erreur. 4. Reliez le fil #4 à Automate(PLC) Entrée I2.3 sur ACR équipé des machines pour essayer debit d'abord puis ACR.	ANMERKUNG: * Zeigt an bestandteil geliefert durch kunde. Bestandteile dargestellt mit gestrichelte Linien sind wahlweise freigestellt. 1. Signode versorgungs schließt an wie gezeigt. Wenn kunde versorgungs entfernt E-Anschlag der Überbrücker muß sein entfernt. 2. Schließen Sie an leitung #4 zu PLC Eingang I2.6 ermöglichen Automatisch Abgeschnitten Zufuhr (ACR) wahl. 3. Schließen Sie an leitung #4 zu PLC Eingang I2.1 zu laufen förderwerk auf Störung. 4. Schließen Sie an leitung #4 zu PLC Eingang I2.3 auf ACR ausgerüstet maschinen zu versuch zufuhr zuerst dann ACR.

ELECTRICAL SCHEMATIC 100

519352-3

LBX-2330

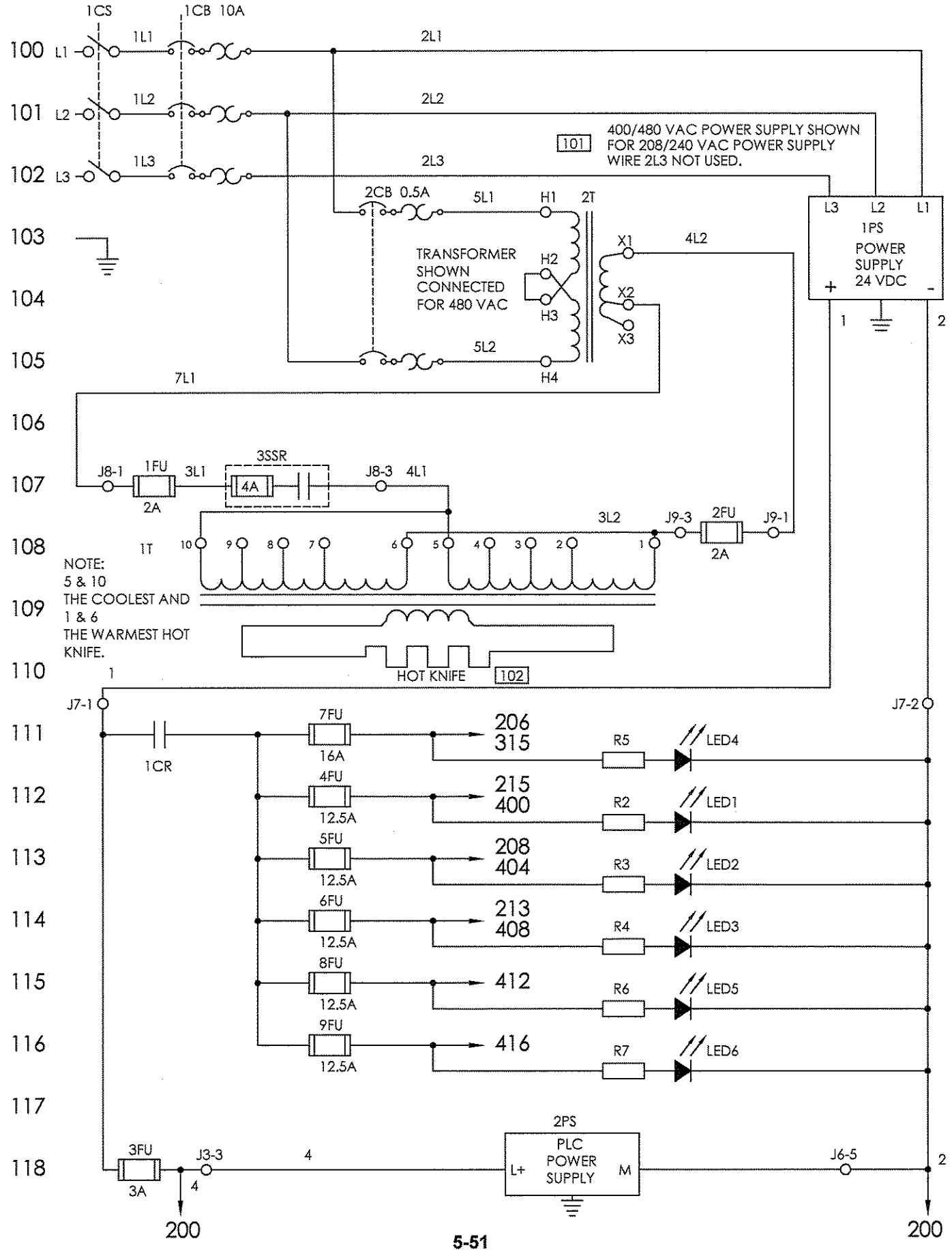

ELECTRICAL SCHEMATIC 100

519352-3

LBX - 2330

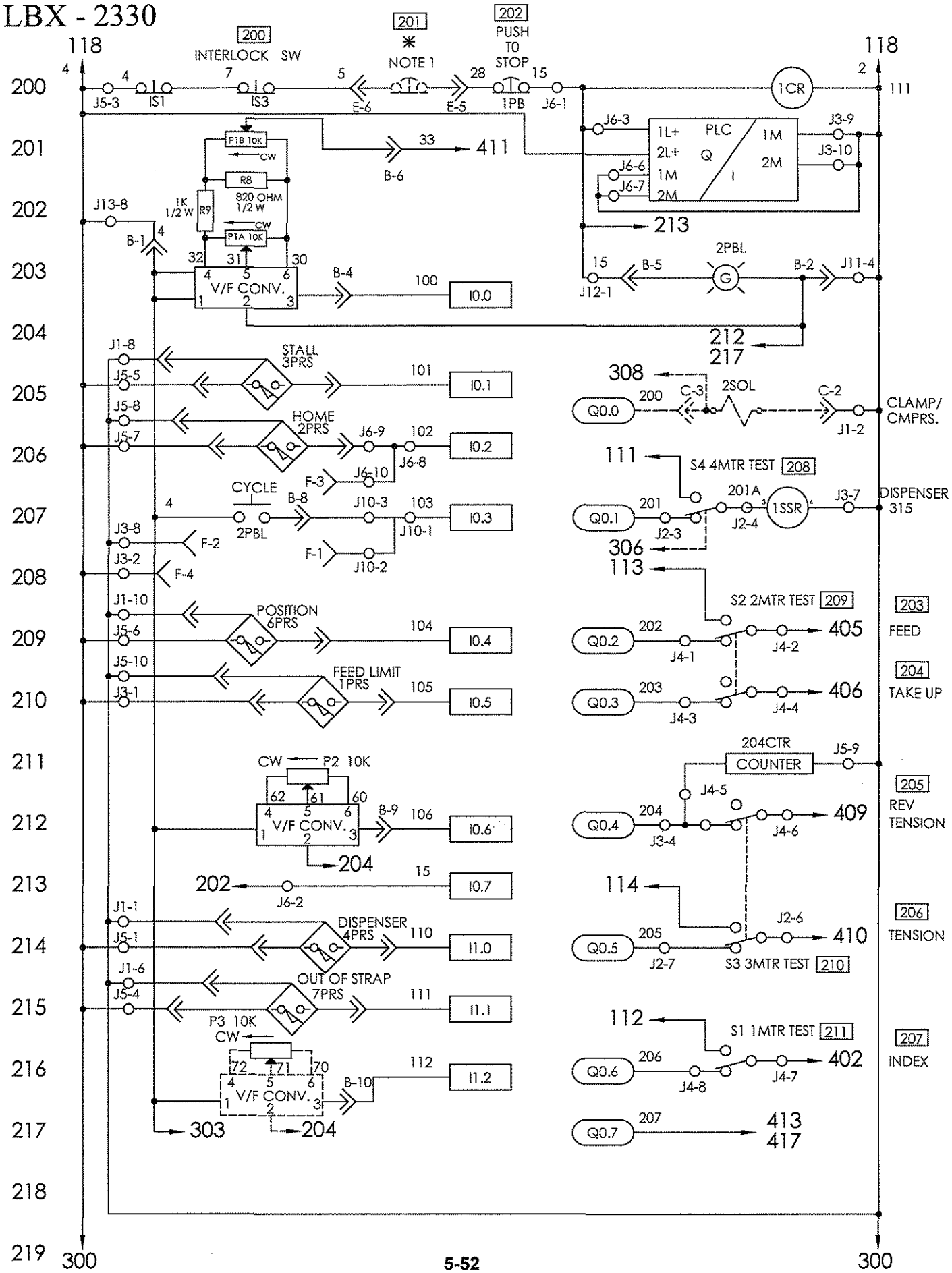

ELECTRICAL SCHEMATIC 100

LBX - 2330

519352-3

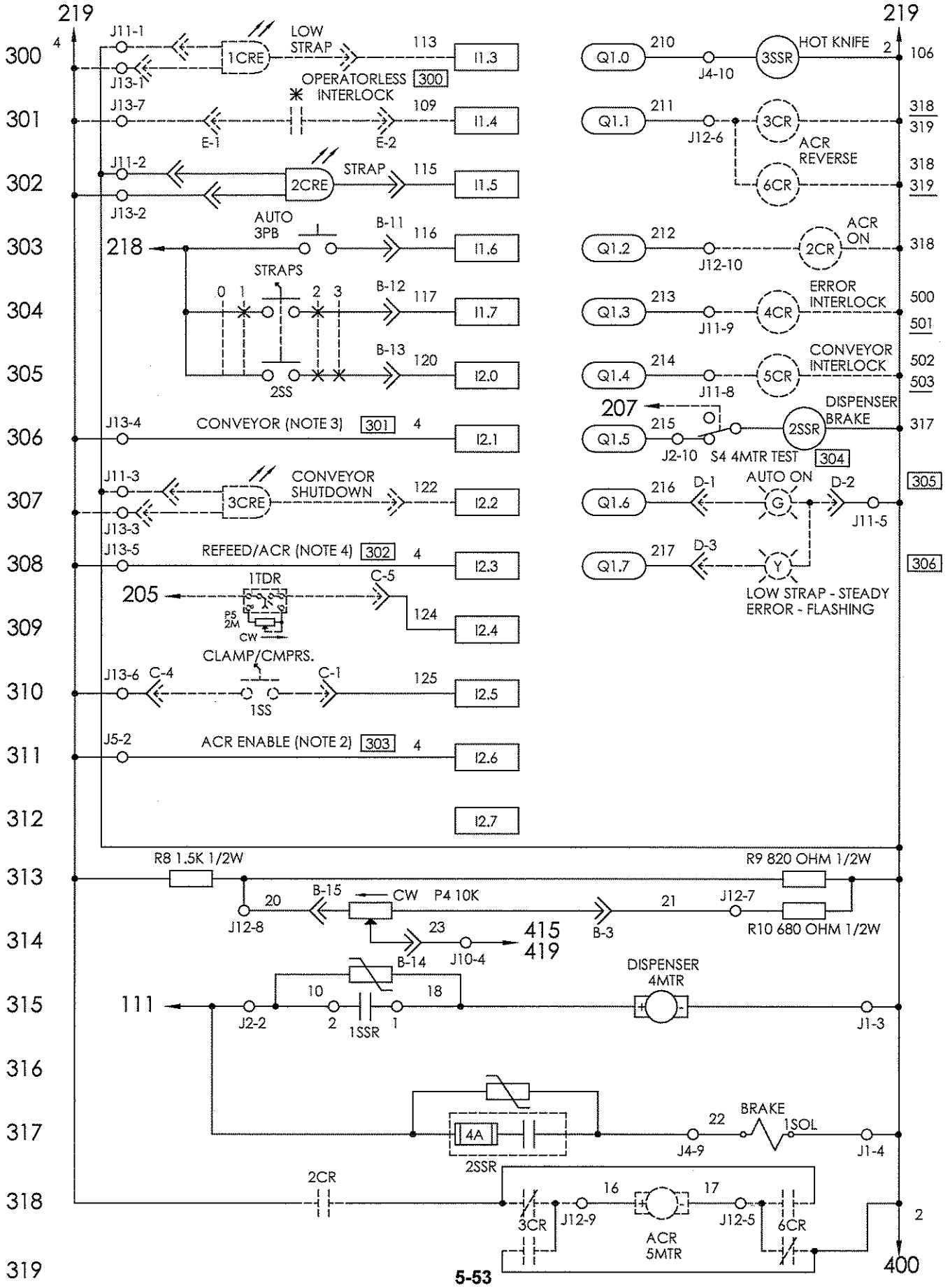

ELECTRICAL SCHEMATIC 100

519352-3

LBX - 2330

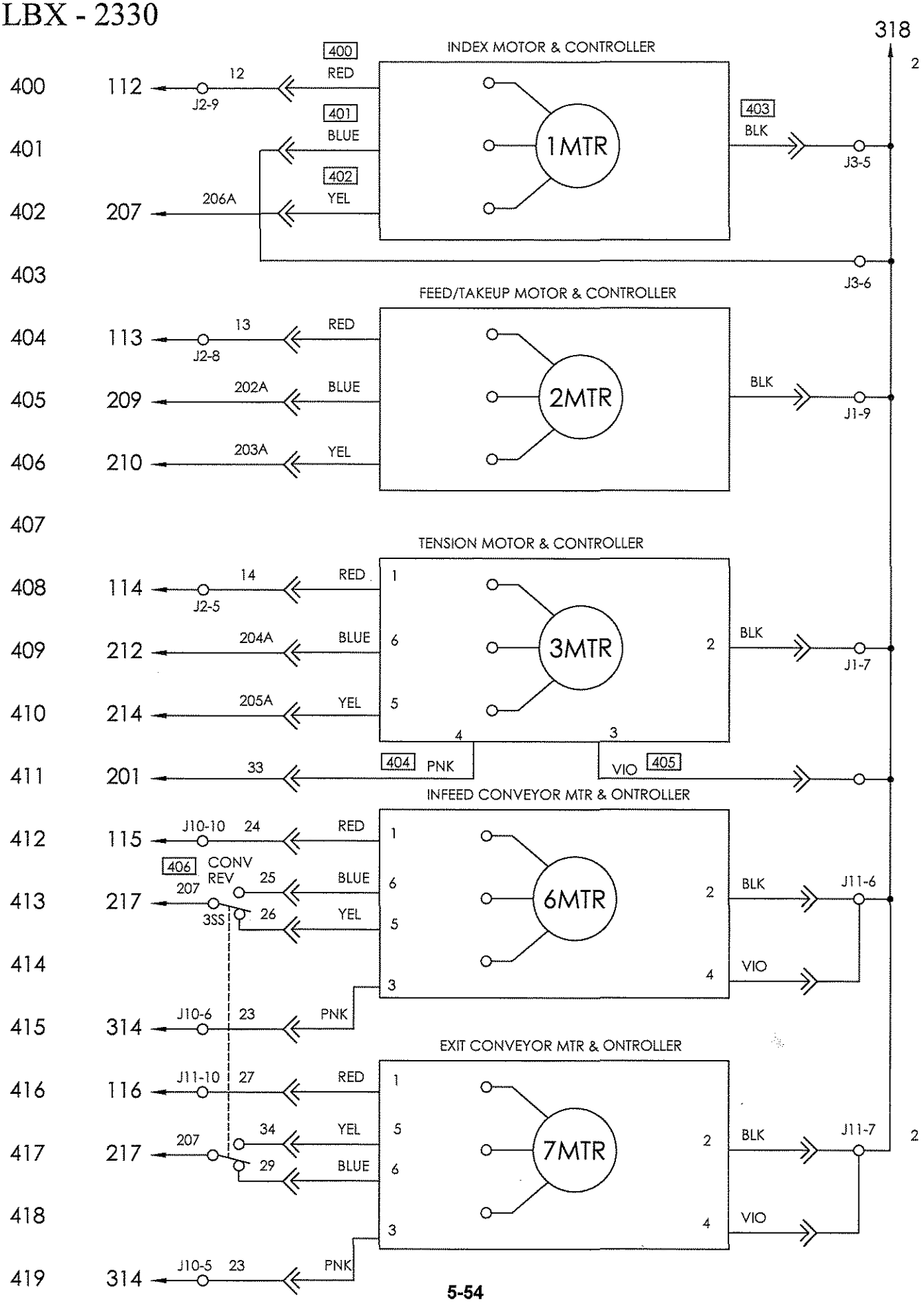

ELECTRICAL SCHEMATIC 100 — 519352-3

LBX - 2330

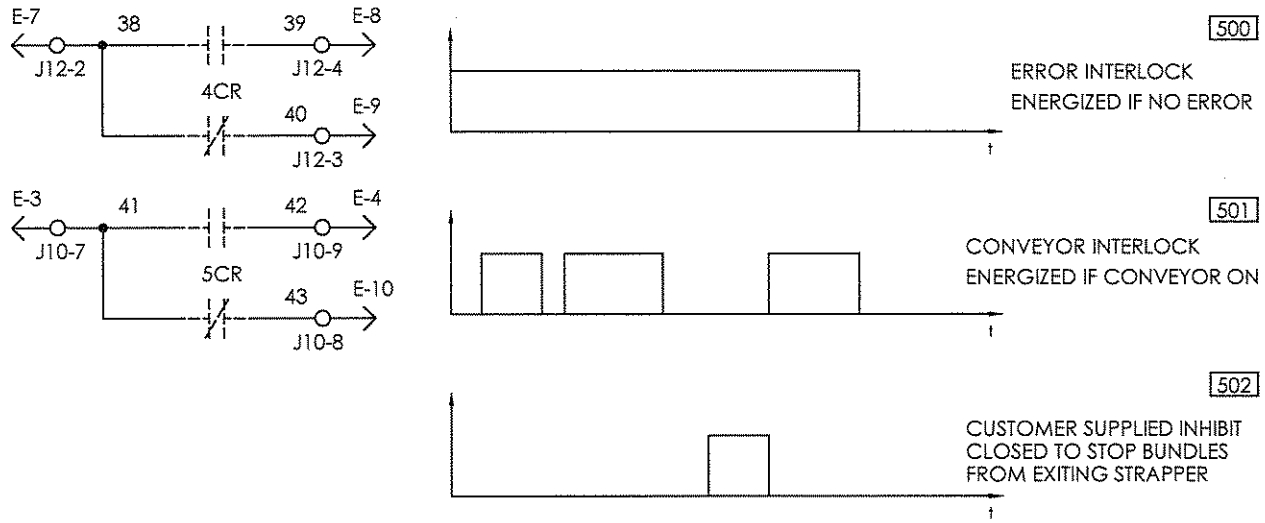

ALTERNATE CONTROL TRANSFORMER CONNECTIONS 503

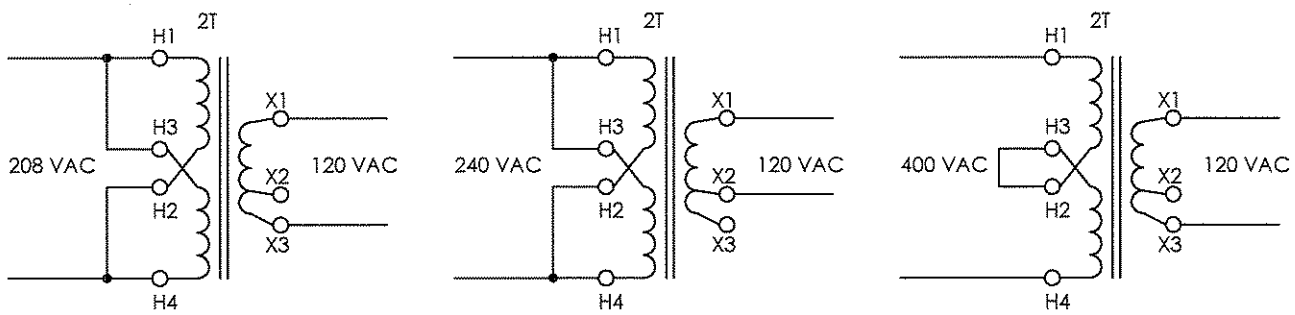

504

NOTES:

* Indicates component supplied by customer.

Components shown with dashed lines are optional.

1. Signode supplies jumper as shown. If customer supplies remote E-Stop the jumper must be removed.
2. Connect wire #4 to PLC Input I2.6 to enable Automatic Cutoff and Refeed (ACR) option.
3. Connect wire #4 to PLC Input I2.1 to run conveyor on error.
4. Connect wire #4 to PLC Input I2.3 on ACR equiped machines to attempt refeed first then ACR.

ELECTRICAL SCHEMATIC 100 519352-3
LBX - 2330

100-118		
	Français	**Deutsch**
100	Schéma électrique des connexions	SCHALTPLAN
101	400/480 VAC ALIMENTATION MONTRÉ POUR 208/240 VAC ALIMENTATION FIL 2L3 NON UTILISÉ.	400/480 VAC STROMVERSORGUNG GEZEIGT FÜR 208/240 VAC STROMVERSORGUNG LEITUNG 2L3 NICHT VERWENDET.
102	Lame Chaffante	HEIZKEL
2T	Transformateur représenté avec connexion pour 480 VAC	TRANSFORMATOR DARGESTELLT ANGESCHLOSSEN LEITUNG 480 VAC
1PS	Alimentation	STROMVERSORGUNG
1T	REMARQUES:5 & 10 est le plus frais & 1& 6 est le chaud le plus chaud Lame Chaffante	ANMERKUNG:5 & 10 IST DAS KÜHLSTE UNDSCHWARZES & 1& 6 IST DAS WÄRMSTE HEISSE HEIZKEL.
2PS	Alimentation PLC Automate	STROMVERSORGUNG PLC
200-218		
	Français	**Deutsch**
200	Interrupteur de verrouillage	Zum Anhalten drücken
201	Remarque: 1	ANMERKUNG: 1
202	Presser pour arrêter	STOSS ZU ANSCHLAG
203	MOTEUR DEBIT LIEN	Enschuß
204	MOTEUR DE RAVALEMENT	Rückzugs
205	INVERSION MOTEUR TENSION LIEN	Rückwärts Bandspann Antreib
206	MOTEUR TENSION LIEN	Bandspann Antreib
207	MOTEUR DE TETE DE CERCLAGE	Aggregat
208	S4 4MTR ESSAI	S4 4MTR TEST
209	S2 2MTR ESSAI	S2 2MTR TEST
210	S3 3MTR ESSAI	S3 3MTR TEST
211	S1 1MTR ESSAI	S1 1MTR TEST
3PRS	FIN DE RAVALEMENT	Stillstand
2PRS	TETE EN P.O.	Grundstellung
2PBL	DEPARTE CYCLE	Fußschalter
6PRS	DETECTEUR DE PROXIMITE	Position
1PRS	FIN DE DEBIT	Einlauf Ende
4PRS	ACCUMULATEUR LIEN	Zufuhr
7PRS	HORS DE LA LIEN	Aus Spule heraus
2SOL	BRIDE/COMPRESSION	Kompression
1SSR	MOTEUR DEVIDOIR	Bandspeicher
204CTR	COMPTEUR	Zähler

300-318		
	Français	Deutsch
300	INTERSERRURE	Sperre
301	CONVOYEUR (REMARQUE: 3)	Förderwerk (Anmerkung: 3)
302	ACR (REMARQUE: 4)	ACR (Anmerkung: 4)
303	ACR PERMETTEZ (REMARQUE: 2)	ACR Ermöglichen Sie (Anmerkung: 2)
304	S4 4MTR ESSAI	S4 4MTR TEST
305	AUTO SUR	Auto es ein
306	BAS LIEN- RÉGULIER ERREUR - CLIGNOTANT	Band knapp - Unveränderlich Störung - Blitzen
1CRE	LIEN INSUFFISANT	Band knapp
2CRE	LIEN	Spule
3PB	AUTO	Auto
2SS	SÉLECTEUR DE LIEN	Spulen
3CRE	ARRÊT DE CONVOYEUR	Förderwerk Abschaltung
1SS	BRIDE/COMPRESSION	Kompression
3SSR	LAME CHAFFANTE	Heiß Heizkel
3CR,6CR	ACR INVERSE	ACR Rückseite
4CR	ERREUR INTERSERRURE	Störung
5CR	CONVOYEUR INTERSERRURE	Förderwerk Sicherheitskreis
2SSR	FREIN DE DEVIDIOR	Bandspeicher Bremse
4MTR	DISTRIBUTEUR	Bandspeicher
1SOL	FREIN	Bremse
5MTR	ACR	ACR

400-418		
	Français	Deutsch
400	ROUGE	Rot
401	BLEU	Blau
402	JAUNE	Gelb
403	NOIR	Schwarz
404	PNK	Pink
405	VIO	Violett
406	CONVOYEUR INVERSE	Förderwerk Rückseite
1MTR	MOTEUR DE TETE DE CERCLAGE & COMMANDE	Aggregatmotor & Steuerung
2MTR	MOTEUR DEBIT LIEN & COMMANDE	Einschußmotor-Rückzugsmotor & Steuerung
3MTR	MOTEUR TENSION LIEN & COMMANDE	Bandspann-Antreib & Steuerung
6MTR	ENTRÉE CONVOYEUR MOTEUR ET CONTRÔLEUR	Eingang Förderwerk Mtr. & Steuerpult
7MTR	SORTIE CONVOYEUR MOTEUR ET CONTRÔLEUR	Ausgang Förderwerk Mtr. & Steuerpult

500-518		
	Français	Deutsch
500	INTERSERRURE ERREUR ACTIVÉ SI AUCUNE ERREUR	Störung Sicherheitskreis Eingeschaltet wenn keine Störung
501	COUPLAGE DE CONVOYEUR ACTIVÉ SI CONVOYEUR DESSUS	Förderwerk-Sicherheitskreis eingeschaltet wenn förderwerk funktion
502	LE CLIENT FOURNI EMPÊCHENT FERMÉ POUR ARRÊTER DES PAQUETS DE SORTIR STRAPPER	Kunde geliefert sperre Geschlossen, um zu stoppen bündel von herausnehmen bügeler
503	RACCORDEMENTS ALTERNATIFS DE TRANSFORMATEUR DE COMMANDE	Alternative steuerung transformator anschlüsse
504	REMARQUE: * Indique le composant fourni par le client. Les composants montrés avec des lignes tirées sont facultatifs. 1. Signode fournit le pullover comme montré. Si le client fournit à distance E-Arrêtez le pullover doit être enlevé. 2. Reliez le fil #4 à Automate(PLC) Entrée I2.6 à permettez Automatique Cutoff an Refeed (ACR) option. 3. Reliez le fil #4 à Automate(PLC) Entrée I2.1 pour courir le convoyeur sur l'erreur. 4. Reliez le fil #4 à Automate(PLC) Entrée I2.3 sur ACR équipé des machines pour essayer debit d'abord puis ACR.	ANMERKUNG: * Zeigt an bestandteil geliefert durch kunde. Bestandteile dargestellt mit gestrichelte Linien sind wahlweise freigestellt. 1. Signode versorgungs schließt an wie gezeigt. Wenn kunde versorgungs entfernt E-Anschlag der Überbrücker muß sein entfernt. 2. Schließen Sie an leitung #4 zu PLC Eingang I2.6 ermöglichen Automatisch Abgeschnitten Zufuhr (ACR) wahl. 3. Schließen Sie an leitung #4 zu PLC Eingang I2.1 zu laufen förderwerk auf Störung. 4. Schließen Sie an leitung #4 zu PLC Eingang I2.3 auf ACR ausgerüstet maschinen zu versuch zufuhr zuerst dann ACR.

ELECTRICAL SCHEMATIC 100

519351-2

LBX-2300 SEMI-AUTO 575V 3PHASE

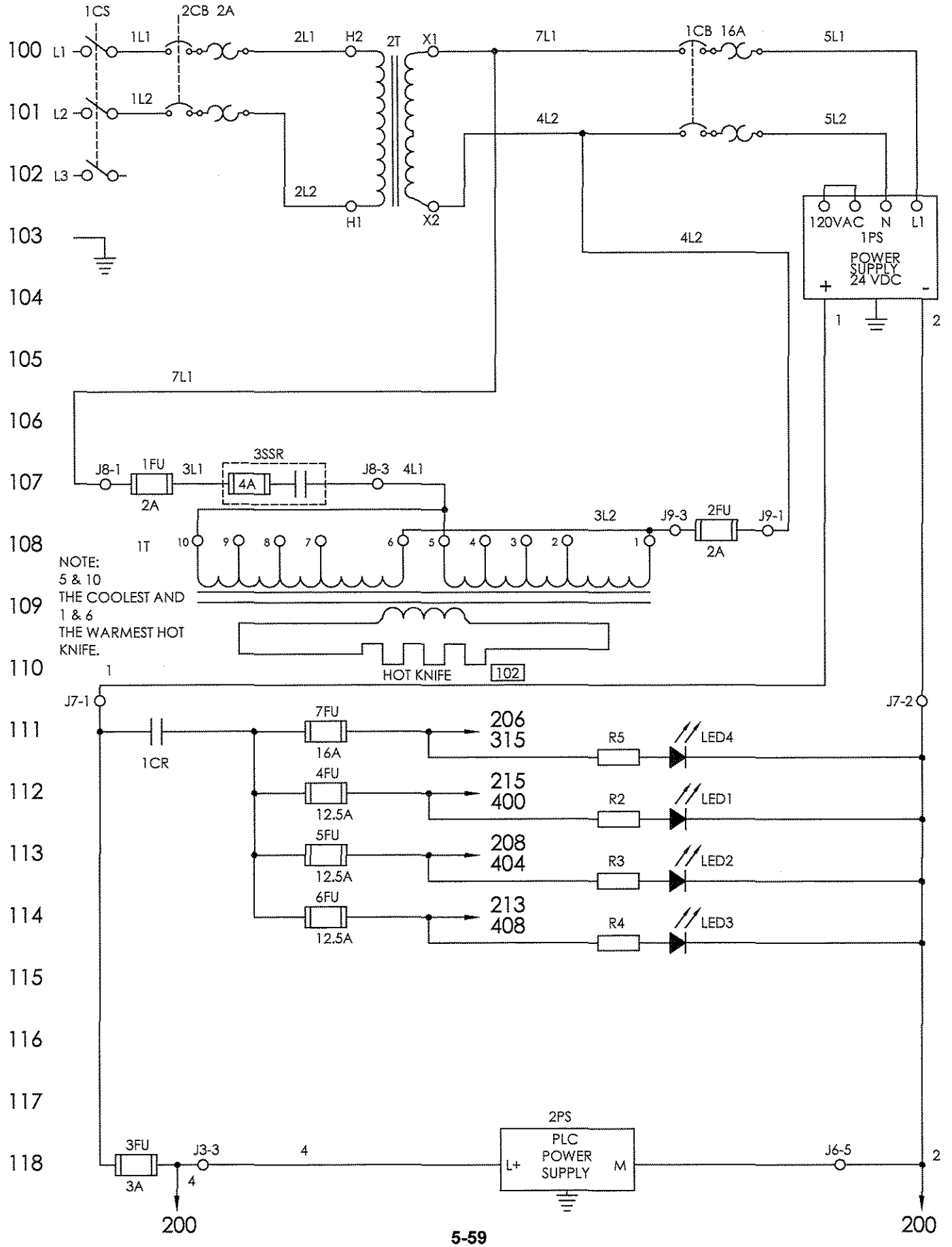

ELECTRICAL SCHEMATIC 100

519351-2

LBX - 2300 SEMI-AUTO 575V 3 PHASE

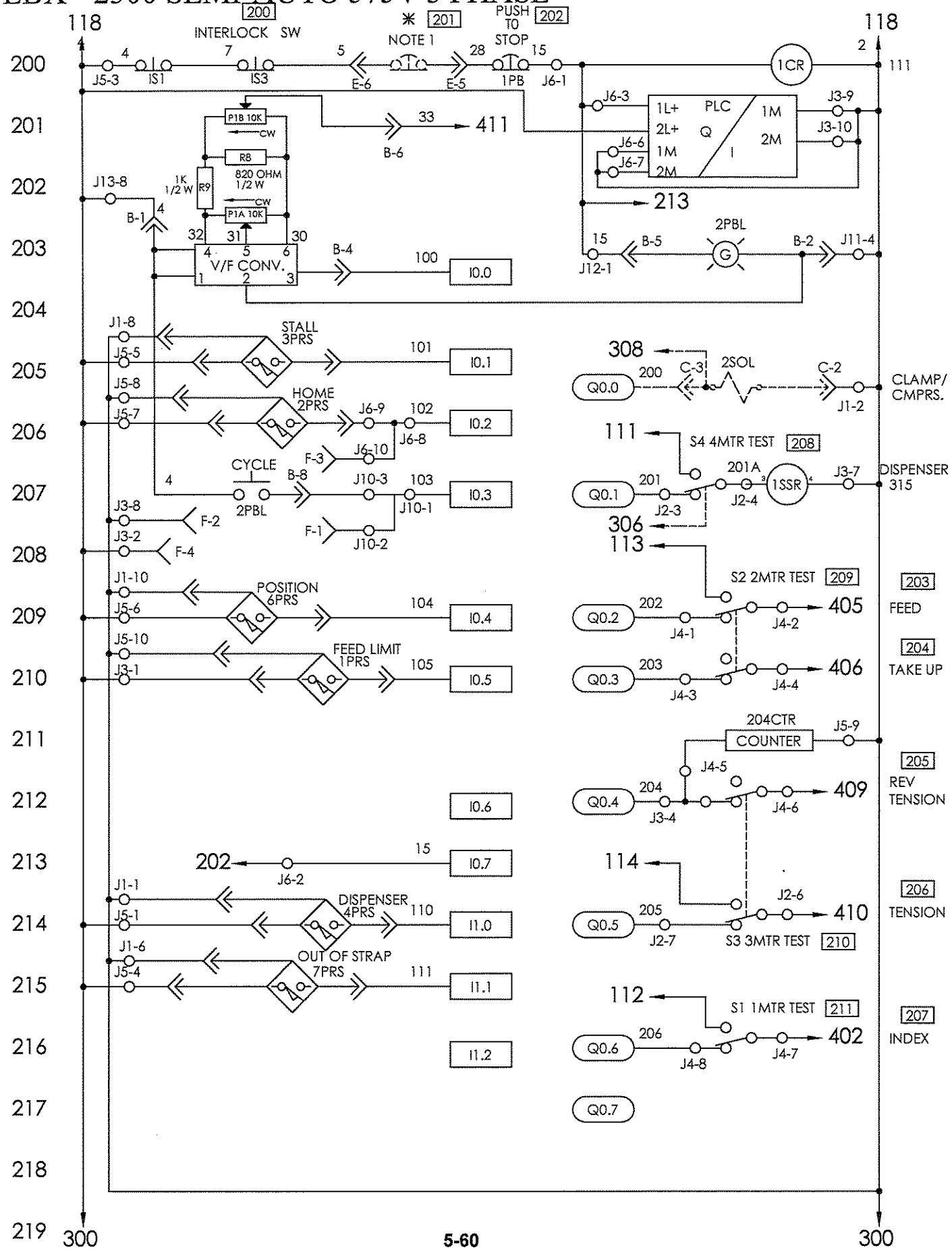

ELECTRICAL SCHEMATIC 100 — 519351-2

LBX - 2300 SEMI-AUTO 575V 3 PHASE

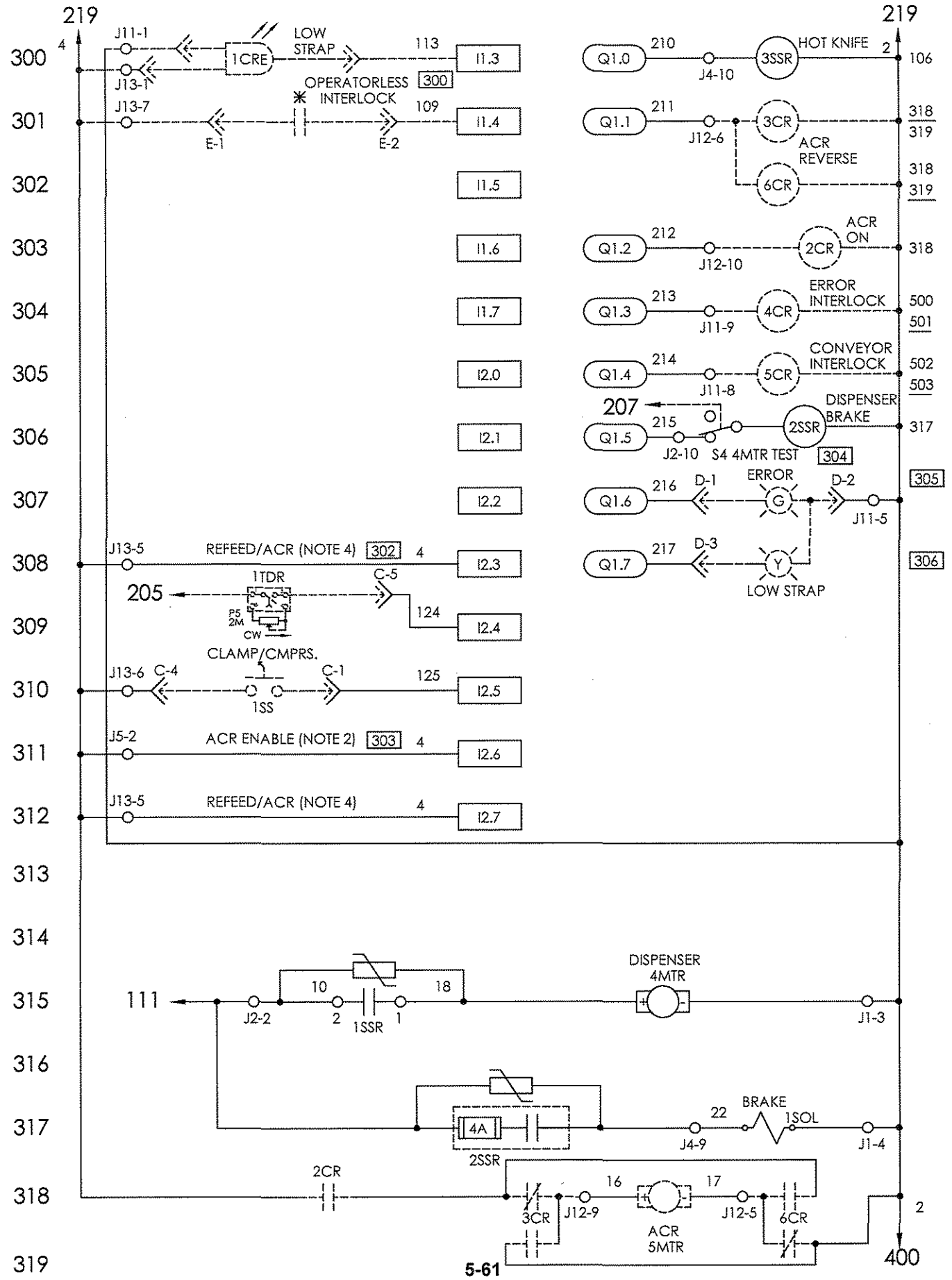

ELECTRICAL SCHEMATIC 100

519351-2

LBX - 2300 SEMI-AUTO 575V 3 PHASE

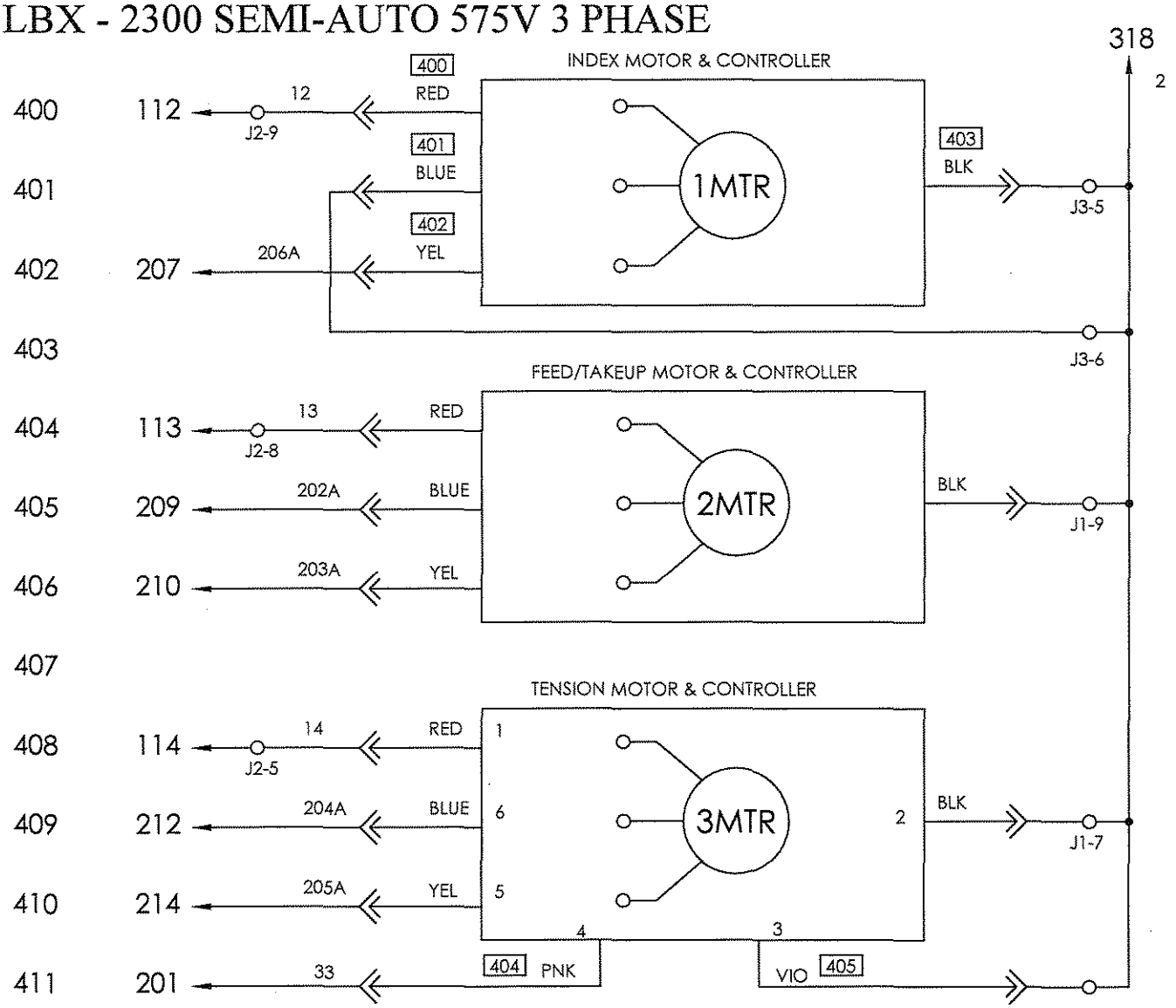

400 401 402 403 404 405 406 407 408 409 410 411 412 413 414 415 416 417 418 419

ELECTRICAL SCHEMATIC [100]
LBX - 2300 SEMI-AUTO 575V 3 PHASE

519351-2

500

501

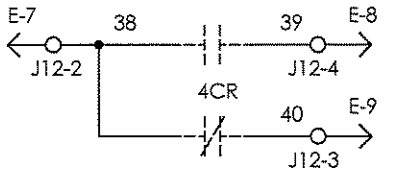

ERROR INTERLOCK [500]
ENERGIZED IF NO ERROR

502

503

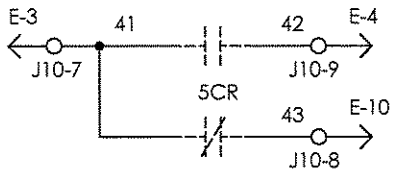

CONVEYOR INTERLOCK [501]
ENERGIZED DURING STRAP CYCLE

504

505

506

507

508

509

510

511

512

513

514

515

516

[504]

517 NOTES:
* Indicates component supplied by customer.
Components shown with dashed lines are optional.

518

1. Signode supplies jumper as shown. If customer supplies remote E-Stop the jumper must be removed.
2. Connect wire #4 to PLC Input I2.6 to enable Automatic Cutoff and Refeed (ACR) option.
3. N/A
4. Connect wire #4 to PLC Input I2.3 on ACR equiped machines to attempt refeed first then ACR.

ELECTRICAL SCHEMATIC 100 519351-2
LBX - 2300 SEMI-AUTO 575V 3 PHASE

100-118		
	Français	**Deutsch**
100	Schéma électrique des connexions	SCHALTPLAN
102	Lame Chaffante	HEIZKEL
1PS	Alimentation	STROMVERSORGUNG
1T	REMARQUES:5 & 10 est le plus frais & 1& 6 est le chaud le plus chaud Lame Chaffante	ANMERKUNG:5 & 10 IST DAS KÜHLSTE UNDSCHWARZES & 1& 6 IST DAS WÄRMSTE HEISSE HEIZKEL.
2PS	Alimentation PLC Automate	STROMVERSORGUNG PLC
200-218		
	Français	**Deutsch**
200	Interrupteur de verrouillage	Zum Anhalten drücken
201	Remarque: 1	ANMERKUNG: 1
202	Presser pour arrêter	STOSS ZU ANSCHLAG
203	MOTEUR DEBIT LIEN	Enschuß
204	MOTEUR DE RAVALEMENT	Rückzugs
205	INVERSION MOTEUR TENSION LIEN	Rückwärts Bandspann Antreib
206	MOTEUR TENSION LIEN	Bandspann Antreib
207	MOTEUR DE TETE DE CERCLAGE	Aggregat
208	S4 4MTR ESSAI	S4 4MTR TEST
209	S2 2MTR ESSAI	S2 2MTR TEST
210	S3 3MTR ESSAI	S3 3MTR TEST
211	S1 1MTR ESSAI	S1 1MTR TEST
3PRS	FIN DE RAVALEMENT	Stillstand
2PRS	TETE EN P.O.	Grundstellung
2PBL	DEPARTE CYCLE	Fußschalter
6PRS	DETECTEUR DE PROXIMITE	Position
1PRS	FIN DE DEBIT	Einlauf Ende
4PRS	ACCUMULATEUR LIEN	Zufuhr
7PRS	HORS DE LA LIEN	Aus Spule heraus
2SOL	BRIDE/COMPRESSION	Kompression
1SSR	MOTEUR DEVIDOIR	Bandspeicher
204CTR	COMPTEUR	Zähler

ELECTRICAL SCHEMATIC 100 519351-2
LBX - 2300 SEMI-AUTO 575V 3 PHASE

300-318		
	Français	**Deutsch**
300	INTERSERRURE	Sperre
302	ACR (REMARQUE: 4)	ACR (Anmerkung: 4)
303	ACR PERMETTEZ (REMARQUE: 2)	ACR Ermöglichen Sie (Anmerkung: 2)
304	S4 4MTR ESSAI	S4 4MTR TEST
305	ERREUR	STÖRUNG
306	BAS LIEN	NIEDRIG BAND
1CRE	LIEN INSUFFISANT	Band knapp
1SS	BRIDE/COMPRESSION	Kompression
3SSR	LAME CHAFFANTE	Heiß Heizkel
3CR,6CR	ACR INVERSE	ACR Rückseite
4CR	ERREUR INTERSERRURE	Störung
5CR	CONVOYEUR INTERSERRURE	Förderwerk Sicherheitskreis
2SSR	FREIN DE DEVIDIOR	Bandspeicher Bremse
4MTR	DISTRIBUTEUR	Bandspeicher
1SOL	FREIN	Bremse
5MTR	ACR	ACR
400-418		
	Français	**Deutsch**
400	ROUGE	Rot
401	BLEU	Blau
402	JAUNE	Gelb
403	NOIR	Schwarz
404	PNK	Pink
405	VIO	Violett
406	CONVOYEUR INVERSE	Förderwerk Rückseite
1MTR	MOTEUR DE TETE DE CERCLAGE & COMMANDE	Aggregatmotor & Steuerung
2MTR	MOTEUR DEBIT LIEN & COMMANDE	Einschußmotor-Rückzugsmotor & Steuerung
3MTR	MOTEUR TENSION LIEN & COMMANDE	Bandspann-Antreib & Steuerung
500-518		
	Français	**Deutsch**
500	INTERSERRURE ERREUR ACTIVÉ SI AUCUNE ERREUR	Störung Sicherheitskreis Eingeschaltet wenn keine Störung
501	COUPLAGE DE CONVOYEUR ACTIVÉ SI CONVOYEUR DESSUS	Förderwerk-Sicherheitskreis eingeschaltet wenn förderwerk funktion
504	REMARQUE: * Indique le composant fourni par le client. Les composants montrés avec des lignes tirées sont facultatifs. 1. Signode fournit le pullover comme montré. Si le client fournit à distance E-Arrêtez le pullover doit être enlevé. 2. Reliez le fil #4 à Automate(PLC) Entrée I2.6 à permettez Automatique Cutoff an Refeed (ACR) option. 3. N/A 4. Reliez le fil #4 à Automate(PLC) Entrée I2.3 sur ACR équipé des machines pour essayer debit d'abord puis ACR.	ANMERKUNG: * Zeigt an bestandteil geliefert durch kunde. Bestandteile dargestellt mit gestrichelte Linien sind wahlweise freigestellt. 1. Signode versorgungs schließt an wie gezeigt. Wenn kunde versorgungs entfernt E-Anschlag der Überbrücker muß sein entfernt. 2. Schließen Sie an leitung #4 zu PLC Eingang I2.6 ermöglichen Automatisch Abgeschnitten Zufuhr (ACR) wahl. 3. N/A 4. Schließen Sie an leitung #4 zu PLC Eingang I2.3 auf ACR ausgerüstet maschinen zu versuch zufuhr zuerst dann ACR.

ELECTRICAL SCHEMATIC [100]

519353-3

LBX-2330 575V

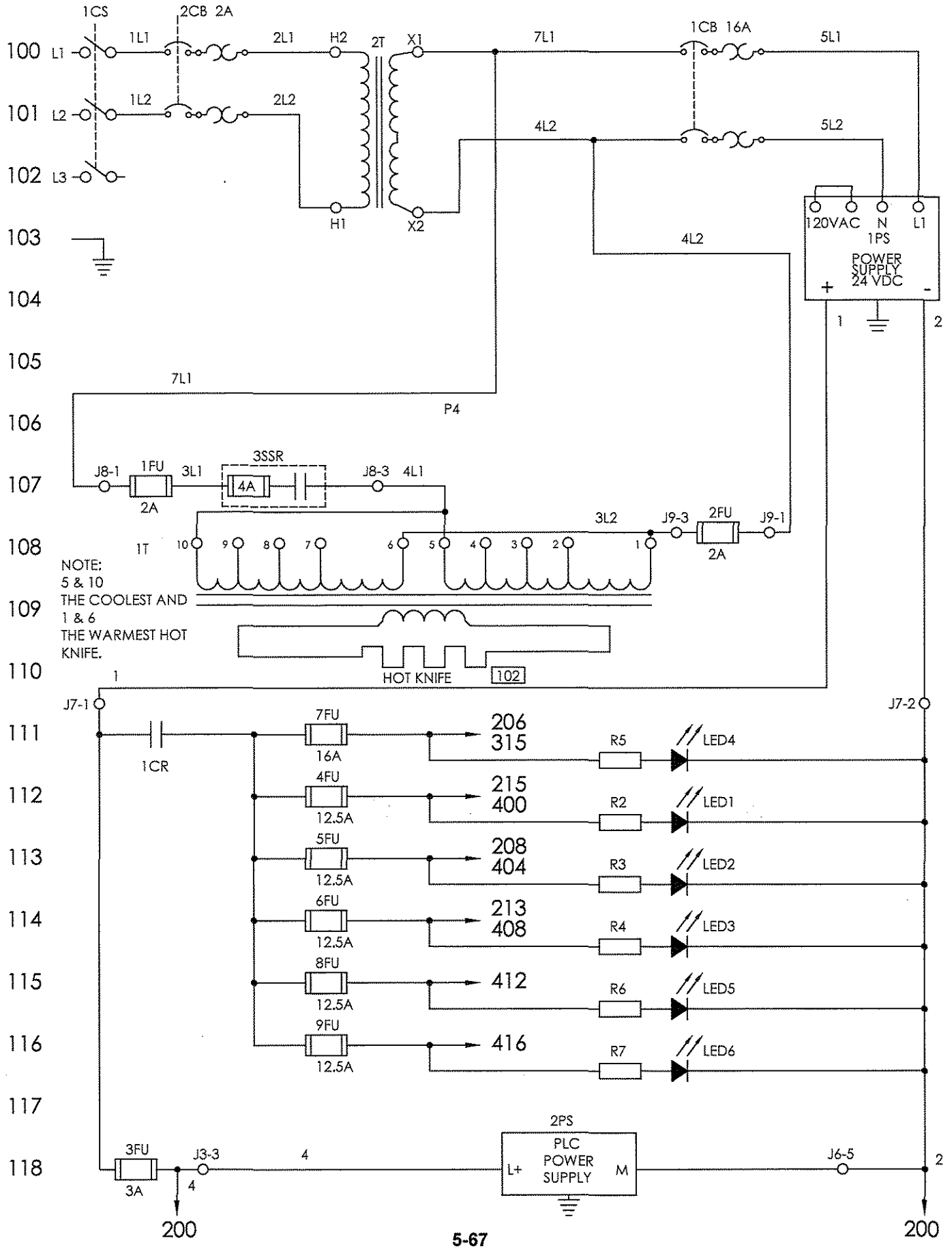

ELECTRICAL SCHEMATIC 100

519353-3

LBX - 2330 575V

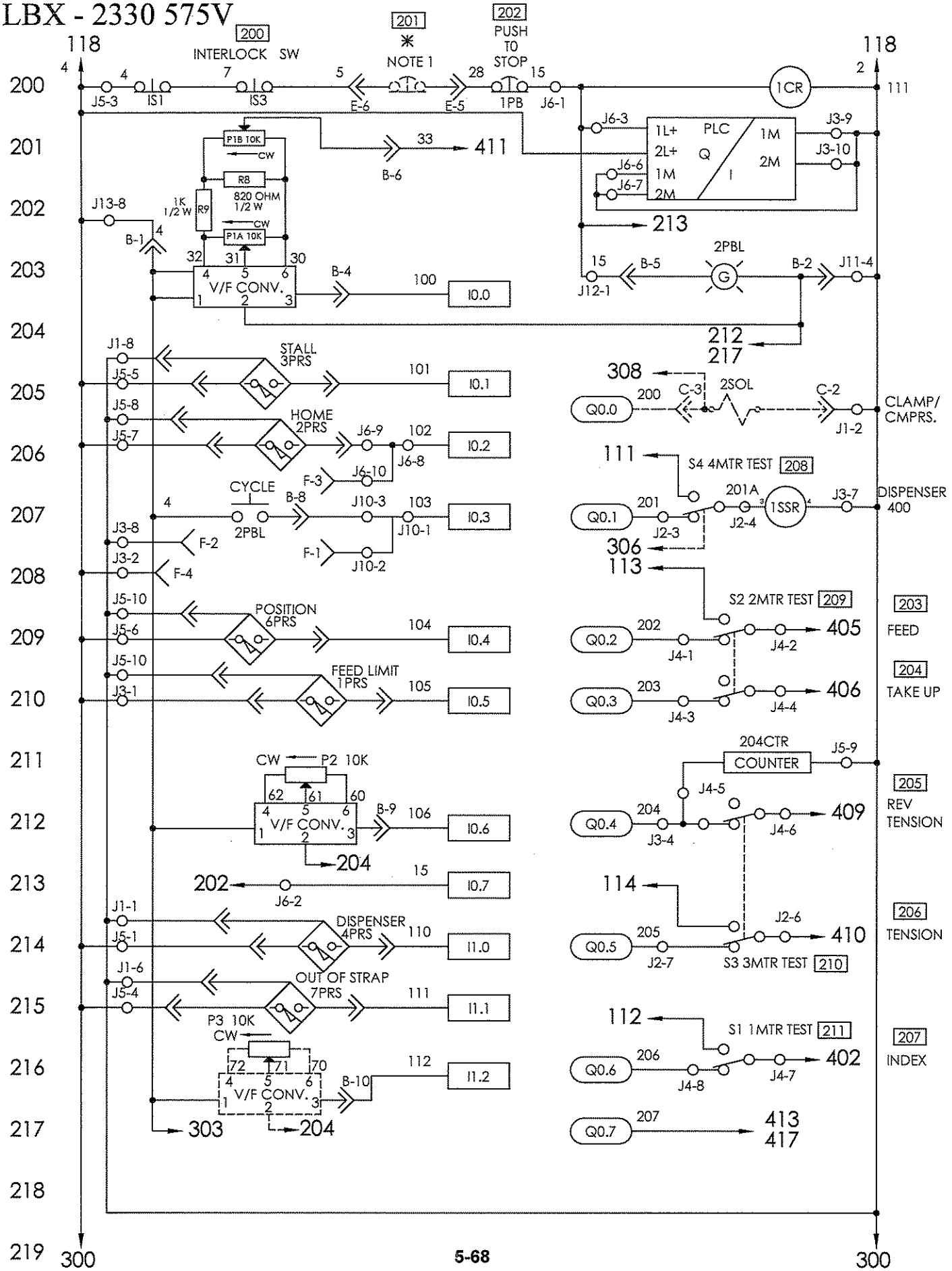

ELECTRICAL SCHEMATIC 100

519353-3

LBX - 2330 575V

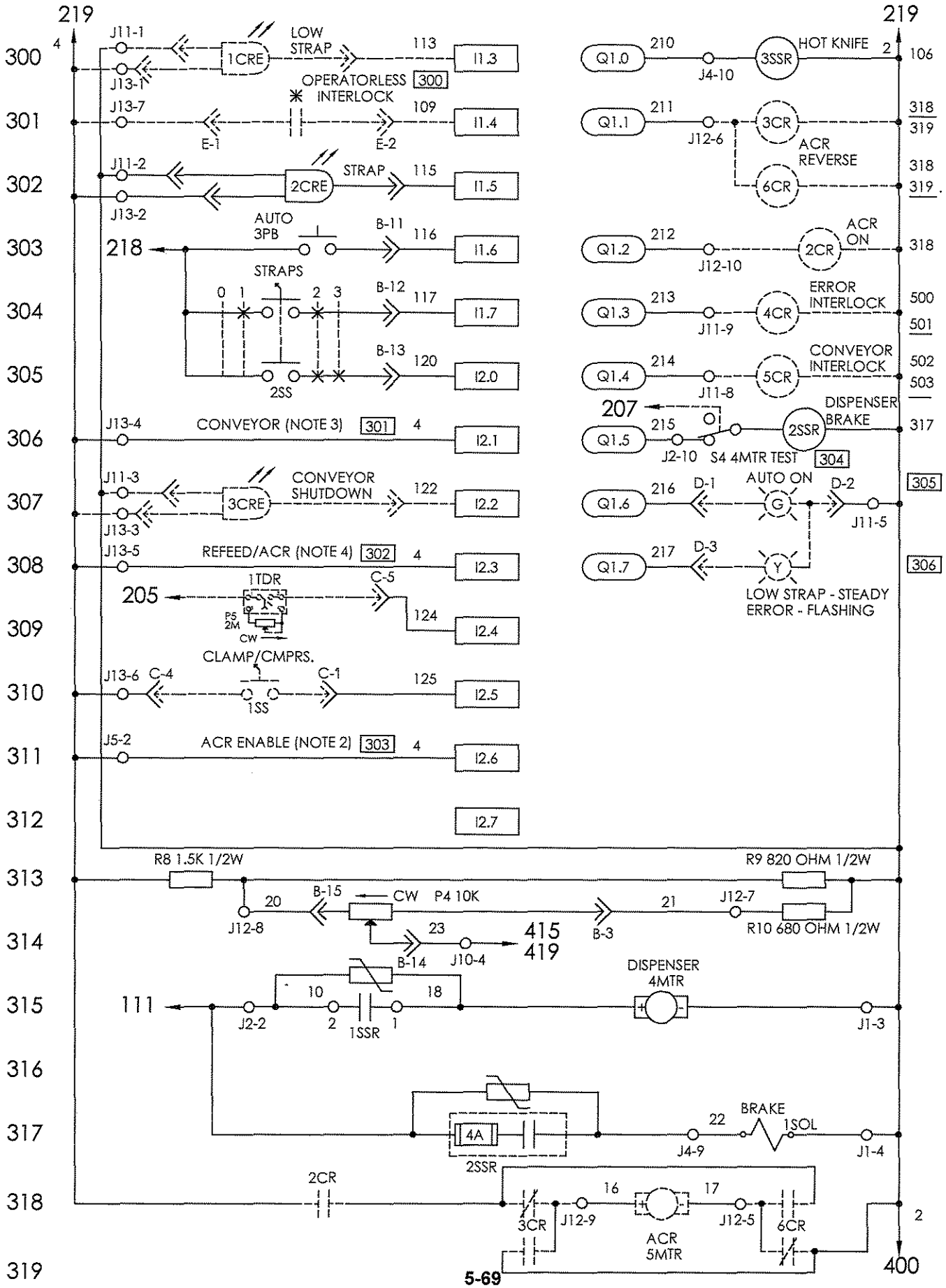

ELECTRICAL SCHEMATIC 100

519353-3

LBX - 2330 575V

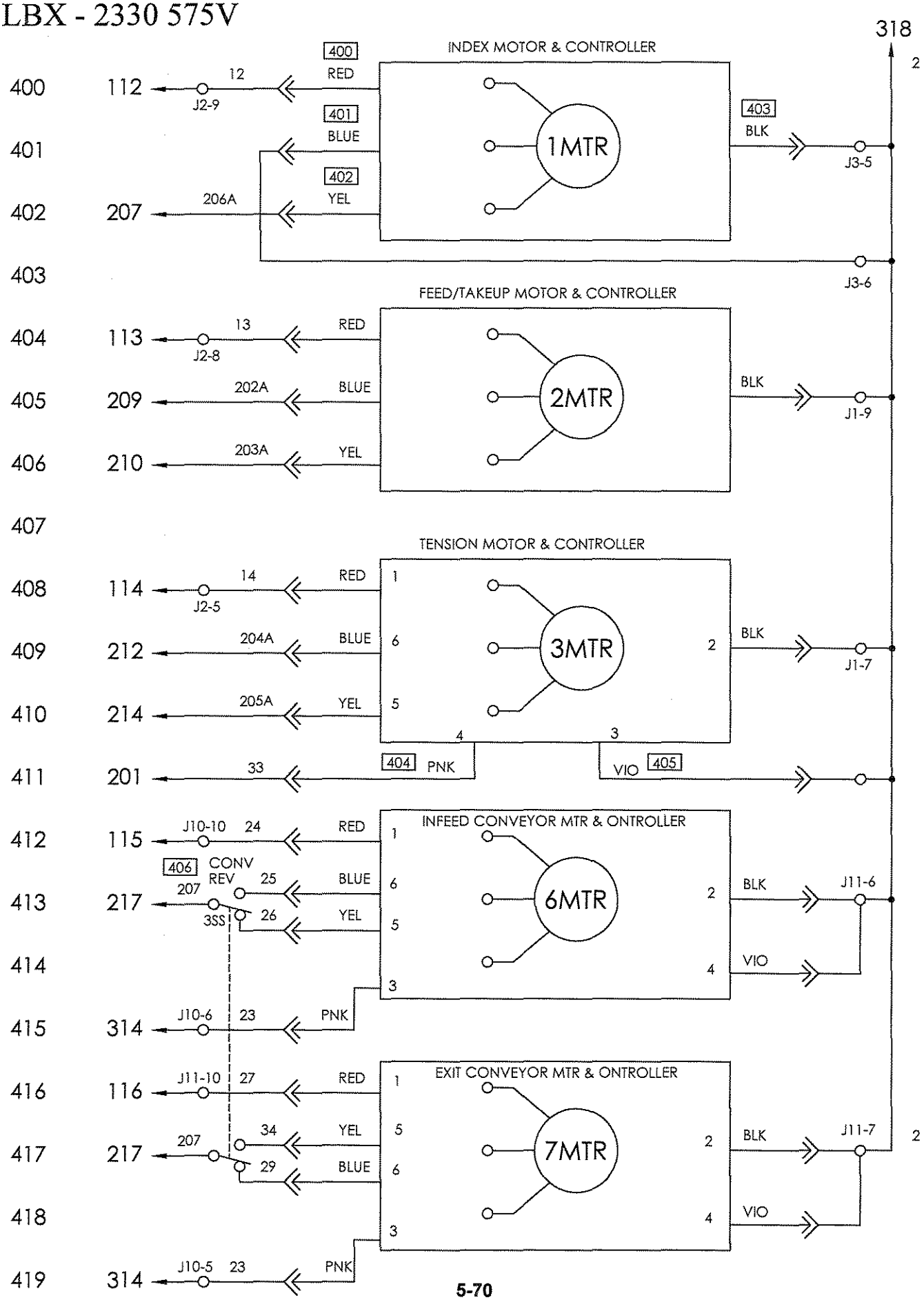

ELECTRICAL SCHEMATIC
LBX - 2330 575V

519353-3

500

501

502

503

504

505

506

507

508

509

510

511

512

513

514

515

516

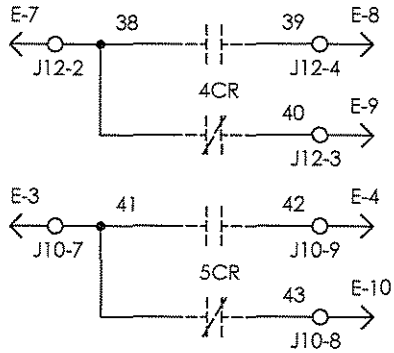

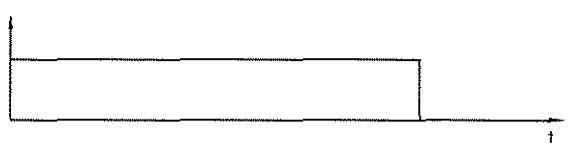

500

ERROR INTERLOCK
ENERGIZED IF NO ERROR

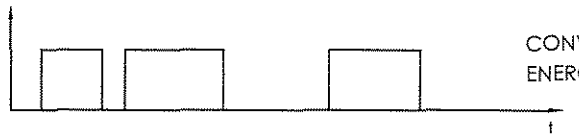

501

CONVEYOR INTERLOCK
ENERGIZED IF CONVEYOR ON

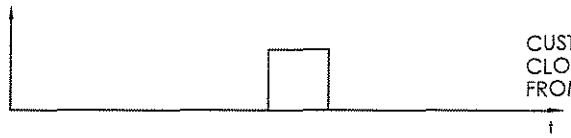

502

CUSTOMER SUPPLIED INHIBIT
CLOSED TO STOP BUNDLES
FROM EXITING STRAPPER

517

504

NOTES:
* Indicates component supplied by customer.
Components shown with dashed lines are optional.

518

1. Signode supplies jumper as shown. If customer supplies remote E-Stop the jumper must be removed.
2. Connect wire #4 to PLC Input I2.6 to enable Automatic Cutoff and Refeed (ACR) option.
3. Connect wire #4 to PLC Input I2.1 to run conveyor on error.
4. Connect wire #4 to PLC Input I2.3 on ACR equiped machines to attempt refeed first then ACR.

ELECTRICAL SCHEMATIC 100 519353-3
LBX - 2330 575V

100-118		
	Français	**Deutsch**
100	Schéma électrique des connexions	SCHALTPLAN
101	400/480 VAC ALIMENTATION MONTRÉ POUR 208/240 VAC ALIMENTATION FIL 2L3 NON UTILISÉ.	400/480 VAC STROMVERSORGUNG GEZEIGT FÜR 208/240 VAC STROMVERSORGUNG LEITUNG 2L3 NICHT VERWENDET.
102	Lame Chaffante	HEIZKEL
2T	Transformateur représenté avec connexion pour 480 VAC	TRANSFORMATOR DARGESTELLT ANGESCHLOSSEN LEITUNG 480 VAC
1PS	Alimentation	STROMVERSORGUNG
1T	REMARQUES:5 & 10 est le plus frais & 1& 6 est le chaud le plus chaud Lame Chaffante	ANMERKUNG:5 & 10 IST DAS KÜHLSTE UNDSCHWARZES & 1& 6 IST DAS WÄRMSTE HEISSE HEIZKEL.
2PS	Alimentation PLC Automate	STROMVERSORGUNG PLC

200-218		
	Français	**Deutsch**
200	Interrupteur de verrouillage	Zum Anhalten drücken
201	Remarque: 1	ANMERKUNG: 1
202	Presser pour arrêter	STOSS ZU ANSCHLAG
203	MOTEUR DEBIT LIEN	Enschuß
204	MOTEUR DE RAVALEMENT	Rückzugs
205	INVERSION MOTEUR TENSION LIEN	Rückwärts Bandspann Antreib
206	MOTEUR TENSION LIEN	Bandspann Antreib
207	MOTEUR DE TETE DE CERCLAGE	Aggregat
208	S4 4MTR ESSAI	S4 4MTR TEST
209	S2 2MTR ESSAI	S2 2MTR TEST
210	S3 3MTR ESSAI	S3 3MTR TEST
211	S1 1MTR ESSAI	S1 1MTR TEST
3PRS	FIN DE RAVALEMENT	Stillstand
2PRS	TETE EN P.O.	Grundstellung
2PBL	DEPARTE CYCLE	Fußschalter
6PRS	DETECTEUR DE PROXIMITE	Position
1PRS	FIN DE DEBIT	Einlauf Ende
4PRS	ACCUMULATEUR LIEN	Zufuhr
7PRS	HORS DE LA LIEN	Aus Spule heraus
2SOL	BRIDE/COMPRESSION	Kompression
1SSR	MOTEUR DEVIDOIR	Bandspeicher
204CTR	COMPTEUR	Zähler

ELECTRICAL SCHEMATIC 100 519353-3
LBX - 2330 575V

300-318		
	Français	**Deutsch**
300	INTERSERRURE	Sperre
301	CONVOYEUR (REMARQUE: 3)	Förderwerk (Anmerkung: 3)
302	ACR (REMARQUE: 4)	ACR (Anmerkung: 4)
303	ACR PERMETTEZ (REMARQUE: 2)	ACR Ermöglichen Sie (Anmerkung: 2)
304	S4 4MTR ESSAI	S4 4MTR TEST
305	AUTO SUR	Auto es ein
306	BAS LIEN- RÉGULIER ERREUR - CLIGNOTANT	Band knapp - Unveränderlich Störung - Blitzen
1CRE	LIEN INSUFFISANT	Band knapp
2CRE	LIEN	Spule
3PB	AUTO	Auto
2SS	SÉLECTEUR DE LIEN	Spulen
3CRE	ARRÊT DE CONVOYEUR	Förderwerk Abschaltung
1SS	BRIDE/COMPRESSION	Kompression
3SSR	LAME CHAFFANTE	Heiß Heizkel
3CR,6CR	ACR INVERSE	ACR Rückseite
4CR	ERREUR INTERSERRURE	Störung
5CR	CONVOYEUR INTERSERRURE	Förderwerk Sicherheitskreis
2SSR	FREIN DE DEVIDIOR	Bandspeicher Bremse
4MTR	DISTRIBUTEUR	Bandspeicher
1SOL	FREIN	Bremse
5MTR	ACR	ACR

400-418		
	Français	**Deutsch**
400	ROUGE	Rot
401	BLEU	Blau
402	JAUNE	Gelb
403	NOIR	Schwarz
404	PNK	Pink
405	VIO	Violett
406	CONVOYEUR INVERSE	Förderwerk Rückseite
1MTR	MOTEUR DE TETE DE CERCLAGE & COMMANDE	Aggregatmotor & Steuerung
2MTR	MOTEUR DEBIT LIEN & COMMANDE	Einschußmotor-Rückzugsmotor & Steuerung
3MTR	MOTEUR TENSION LIEN & COMMANDE	Bandspann-Antreib & Steuerung
6MTR	ENTRÉE CONVOYEUR MOTEUR ET CONTRÔLEUR	Eingang Förderwerk Mtr. & Steuerpult
7MTR	SORTIE CONVOYEUR MOTEUR ET CONTRÔLEUR	Ausgang Förderwerk Mtr. & Steuerpult

500-518		
	Français	**Deutsch**
500	INTERSERRURE ERREUR ACTIVÉ SI AUCUNE ERREUR	Störung Sicherheitskreis Eingeschaltet wenn keine Störung
501	COUPLAGE DE CONVOYEUR ACTIVÉ SI CONVOYEUR DESSUS	Förderwerk-Sicherheitskreis eingeschaltet wenn förderwerk funktion
502	LE CLIENT FOURNI EMPÊCHENT FERMÉ POUR ARRÊTER DES PAQUETS DE SORTIR STRAPPER	Kunde geliefert sperre Geschlossen, um zu stoppen bündel von herausnehmen bügeler
504	REMARQUE: * Indique le composant fourni par le client. Les composants montrés avec des lignes tirées sont facultatifs. 1. Signode fournit le pullover comme montré. Si le client fournit à distance E-Arrêtez le pullover doit être enlevé. 2. Reliez le fil #4 à Automate(PLC) Entrée I2.6 à permettez Automatique Cutoff an Refeed (ACR) option. 3. Reliez le fil #4 à Automate(PLC) Entrée I2.1 pour courir le convoyeur sur l'erreur. 4. Reliez le fil #4 à Automate(PLC) Entrée I2.3 sur ACR équipé des machines pour essayer debit d'abord puis ACR.	ANMERKUNG: * Zeigt an bestandteil geliefert durch kunde. Bestandteile dargestellt mit gestrichelte Linien sind wahlweise freigestellt. 1. Signode versorgungs schließt an wie gezeigt. Wenn kunde versorgungs entfernt E-Anschlag der Überbrücker muß sein entfernt. 2. Schließen Sie an leitung #4 zu PLC Eingang I2.6 ermöglichen Automatisch Abgeschnitten Zufuhr (ACR) wahl. 3. Schließen Sie an leitung #4 zu PLC Eingang I2.1 zu laufen förderwerk auf Störung. 4. Schließen Sie an leitung #4 zu PLC Eingang I2.3 auf ACR ausgerüstet maschinen zu versuch zufuhr zuerst dann ACR.

SECTION-6

PARTS LISTS & VIEWS:

MACHINE FRAME ASSEMBLIES:

- LOWER FRAME (6-1)
- SLACK BOX (6-7)
- INFEED (6-9)
- DISPENSER (6-13)
- SIGN DISPOSITION (6-19)

CHUTE ARCH ASSEMBLIES (6-21)

TABLE-TOP ASSEMBLIES:

- FLAT (6-31)
- ROLLER (6-32)
- AUTOMATIC CONVEYOR (6-33)

⚠WARNING

Inspect all parts daily and replace them if they are worn or broken. Failure to do this can affect a product's operation and could result in serious personal injury.

MACHINE LOWER ASSEMBLY

515850-7

KEY	QTY.	PART NO.	DESCRIPTION
1	1	515800	FRAME WELDMENT
2	2	515394	LEG WELDMENT
3	2	515457	SWIVEL CASTER
4	2	515456	LOCKING SWIVEL CASTER
5	2	011214	M5 X 16 SHCS (ZINC)
6	4	071806	FLAT WASHER 1/2"
7	4	002434	LOCK WASHER 1/2"
8	4	013624	HEX-NUT 1/2"
9	8	162381	M8 LOCKWASHER (ZINC)
10	8	420322	M8 FENDER WASHER (ZINC)
11	8	160331	M8 X 20 SHCS (ZINC)
12	2	515311	FRONT TABLE-TOP/FRAME CORNER CAP
13	2	515312	REAR TABLE-TOP/FRAME CORNER CAP
14	4	515455	M8 X 50 SFHCS DACROMET PLATED
15	1	511112	ACCESSORY CLAMP
16	4	162395	M8x16 SHCS (GLV&WU-ZINC)
17	4	164953	NUT M8 (GLV&WU-ZINC)

MACHINE LOWER ASSEMBLY

515850-7

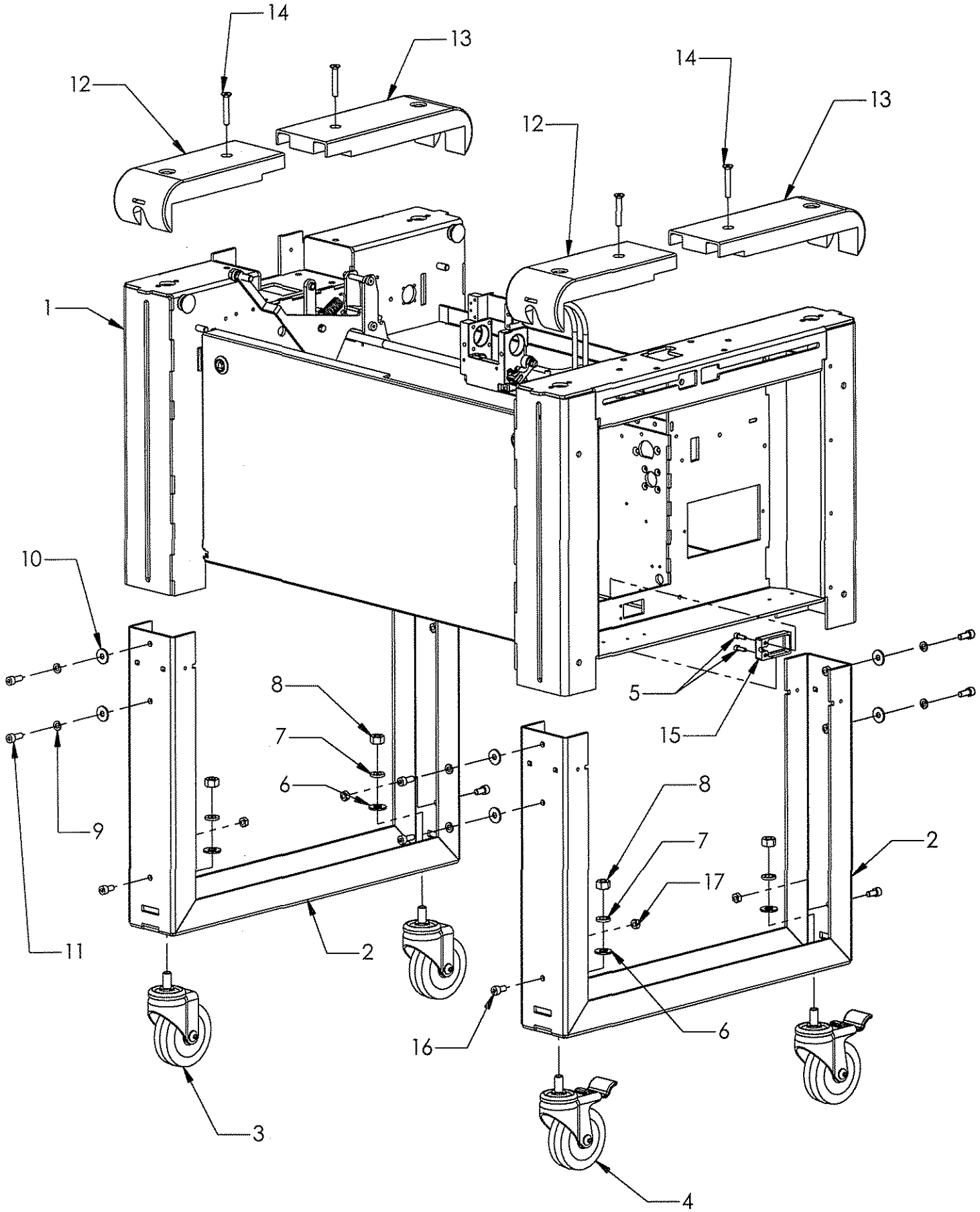

MACHINE LOWER ASSEMBLY

515850-7

KEY	QTY.	PART NO.	DESCRIPTION
1	REF	515800	FRAME WELDMENT
2	REF	514616	SEALER HOUSING
3	1	515809	CHUTE OPENER MOUNTING BRACKET
4	1	516005	CHUTE OPENER ARM
5	3	434321	Ø8/M6 X 40 SHSS
6	1	274924	BALL BEARING (6 X 19 X 6)
7	1	173028	M6 X 16 HHCS
8	1	262617	FLATWASHER (ZINC)
9	1	162374	M6 X 30 SHCS
10	1	515454	CHUTE OPENER SPRING
11	9	481889	M6 LOCKWASHER (ZINC)
12	2	433919	M6 X 12 SHCS (ZINC)
13	2	010076	M5 LOCKWASHER (ZINC)
14	1	514449	BUSHING BLOCK
15	2	272418	M5 X 12 SHCS (FLANGED ZINC)
16	1	016538	1/2" E-RING (TA # 5133-50)
17	1	514437	CAM LINK (MACHINING)
18	1	514420	CLAMP LINK – CHUTE OPENER
19	1	514418	PIVOT SHAFT - CHUTE OPENER
20	2	011214	M5 X 16 SHCS (ZINC)
21	1	433920	M6 X 20 SHCS (ZINC)
22	1	514413	M6 X 25 SPEC LOW HEAD SHCS
23	REF	514639	CAM FOLLOWER
24	4	005465	M6 HEX NUT (ZINC)
25	2	434653	FLANGED BEARING
26	1	514423	CONNECTING LINK
27	1	435951	Ø8/M6 X 16 SHSS
28	A/R	516632	NYLON FLAT WASHER
29	1	514473	SPACER, CAN LINK

28 - USE AS REQUIRE, ASSEMBLY TO BE FREE / MAX. CLEARANCE 2MM

MACHINE LOWER ASSEMBLY

515850-7

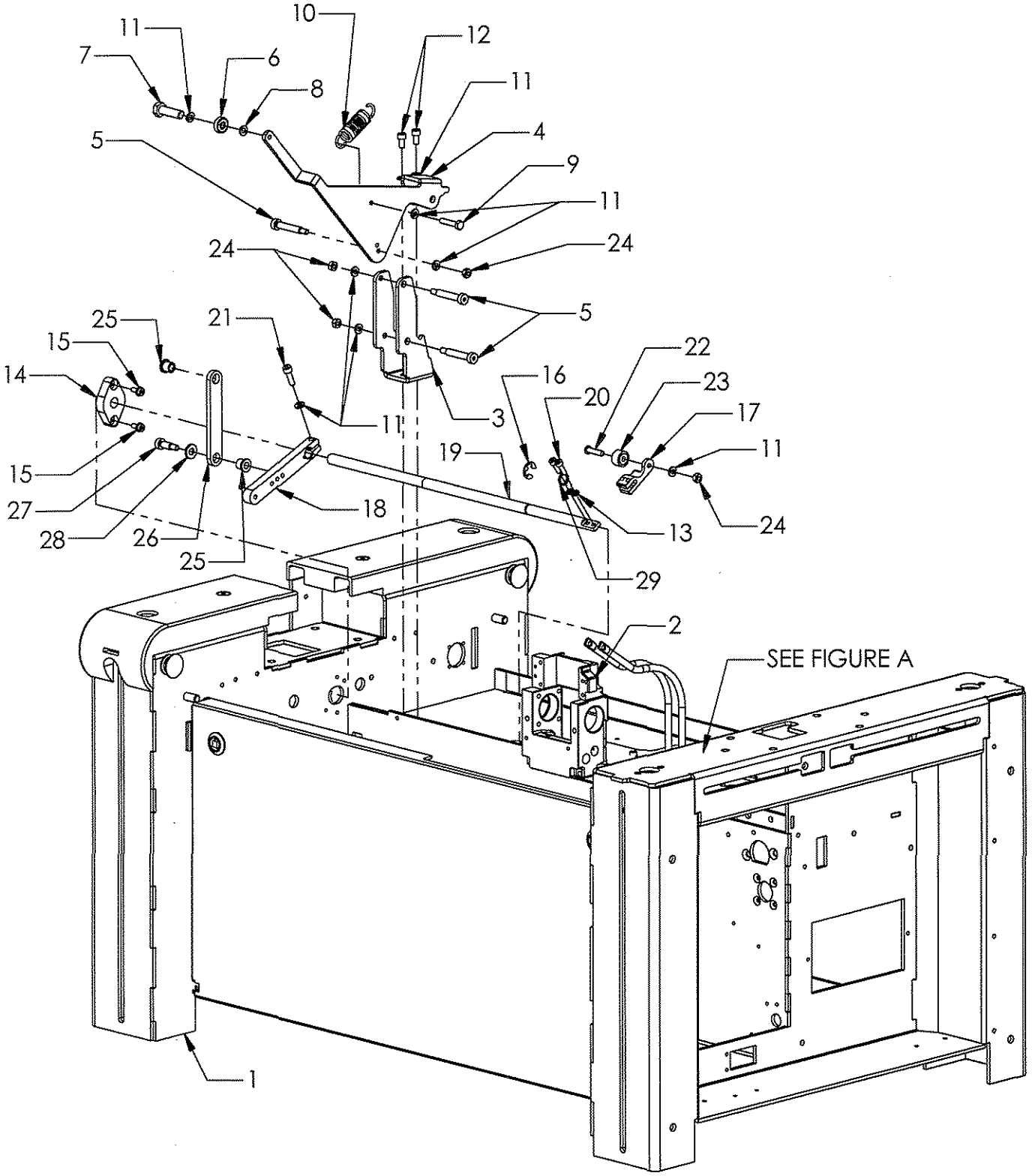

MACHINE LOWER ASSEMBLY

515850-7

KEY	QTY.	PART NO.	DESCRIPTION
1	REF	515800	FRAME WELDMENT
2	1	516456	FRONT DOOR
3	2	680466	PAWL LATCH
4	2	516453	LATCH CAM (34 - 36 MM)

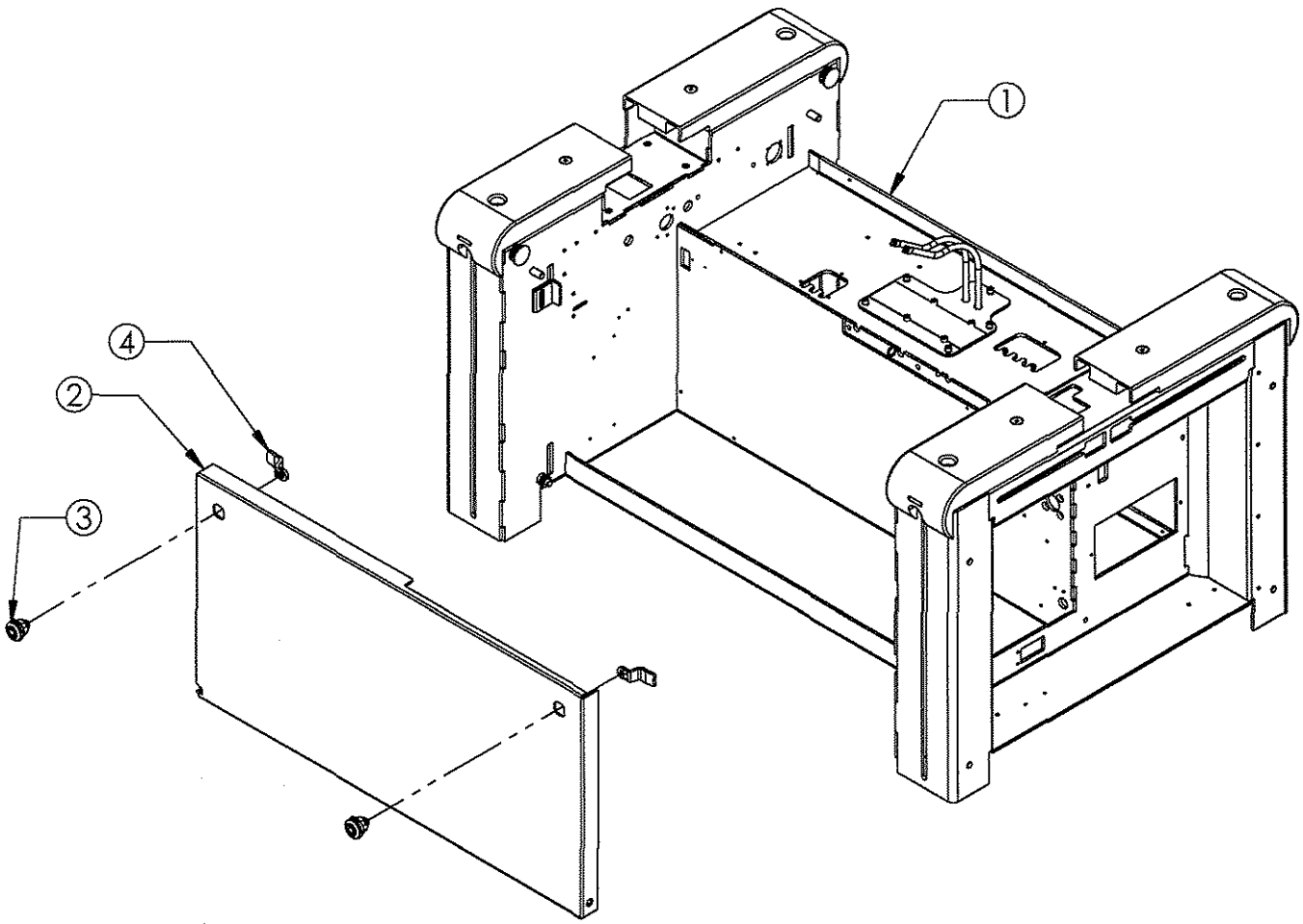

MACHINE LOWER ASSEMBLY- HOT KNIFE TRANSFORMER 515850-7

KEY	QTY	P/N	DESCRIPTION
1	REF	515375	FRAME WELDMENT
2	1	516193	HOT KNIFE GROMMET PLATE
3	1	514861	HOT KNIFE TRANSFORMER
4	6	010028	M5 X 12 SHCS (ZINC)
5	8	171571	M5 FLATWASHER
6	6	169440	M5 HEX NUT (ZINC)
7	1	516728	HOT KNIFE TEMPERATURE DECAL
8	2	516771	HOT KNIFE CABLE
9	6	010076	M5 LOCKWASHER (ZINC)
10	REF	281532	M5 x 10 SHCS (ZINC)
11	REF	010076	M5 LOCKWASHER (ZINC)

WEARING PARTS ARE THOSE ITEMS WHICH ARE UNDERLINED

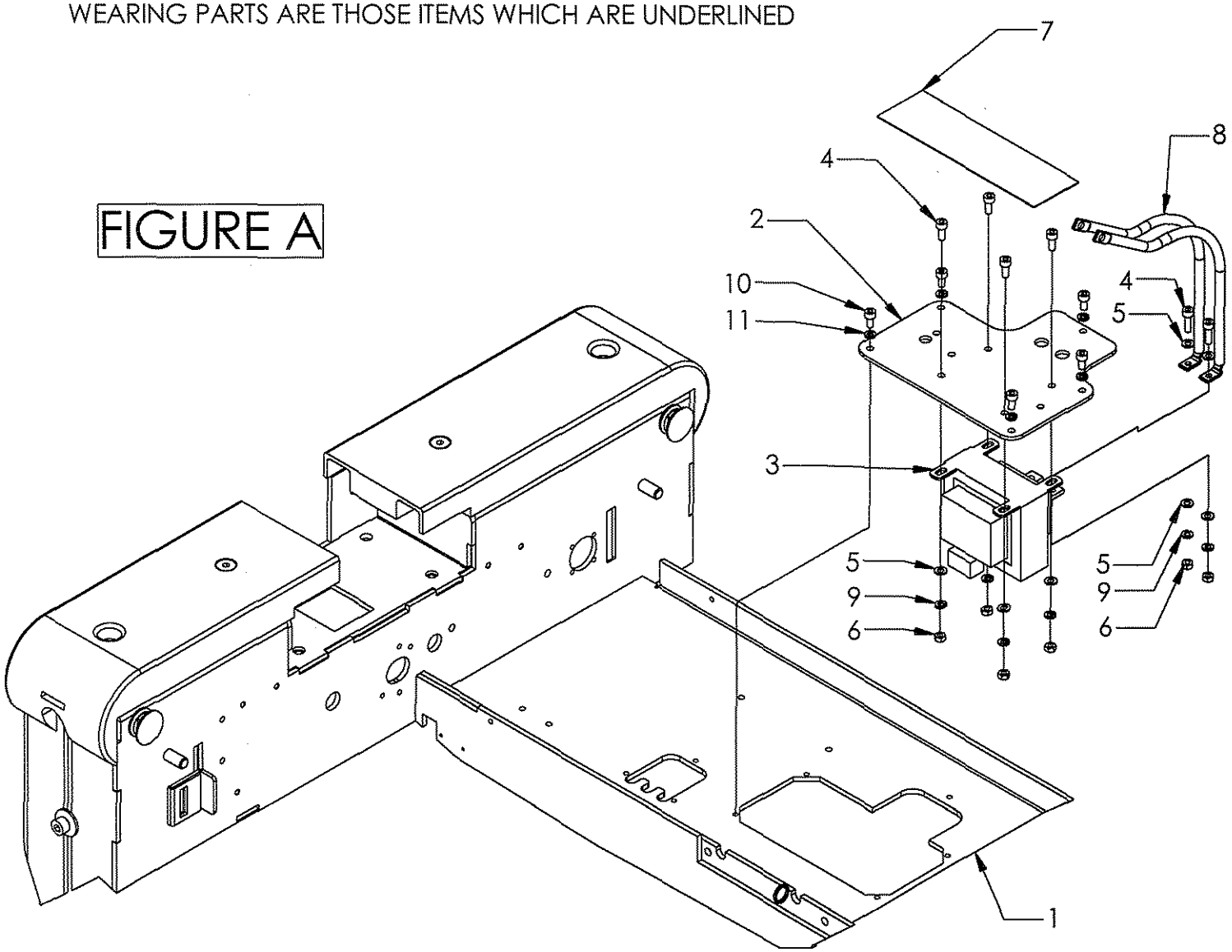

SLACK BOX ASSEMBLY 515851-9

KEY	QTY.	PART NO.	DESCRIPTION
1	REF.	515800	FRAME WELDMENT
2	1	514931	OUT-OF-STRAP PROX. BRACK.
3	1	514747	PROXIMITY SWITCH
4	1	514912	HEX STUD
5	1	514954	BALANCE ARM
6	1	514926	BALANCE ARM PIVOT WELDMENT
7	1	514953	M5 KNURLED THUMBKNOB
9	2	251967	M3 X 8 SBHCS
10	1	515248	CARRIAGE SCREW
11	1	432426	M5 FLATWASHER ZINC
12	2	292448	8 x 6 x 6 DU BUSHING
13	1	516239	M4 HARDENED WASHER
14	1	185700	M4 LOCKWASHER HC (ZINC)
15	1	420216	M4 X 10 SHCS (ZINC)
16	2	010028	M5 X 12 SHCS (ZINC)
17	1	432963	M3 X 12 SFHCS
18	1	515971	SLACK BOX ASSEMBLY
19	6	011214	M5 X 16 SHCS (ZINC)
20	6	274936	THUMBSCREW KNOB M5
21	4	515969	SLACK BOX SPACER - SHORT
22	4	515970	SLACK BOX SPACER - LONG
23	1	514878	STRAP SLACK BLOCKER
24	2	162383	M4 X 8 SHCS (ZINC)
25	1	514694	M4 X10 SPEC LOW HEAD SHCS
26	1	514887	BALL BEARING 13X4X5
27	1	514872	4/8 S 0.5 SHIM RING
28	1	174364	M3 NUT

SLACK BOX ASSEMBLY

515851-9

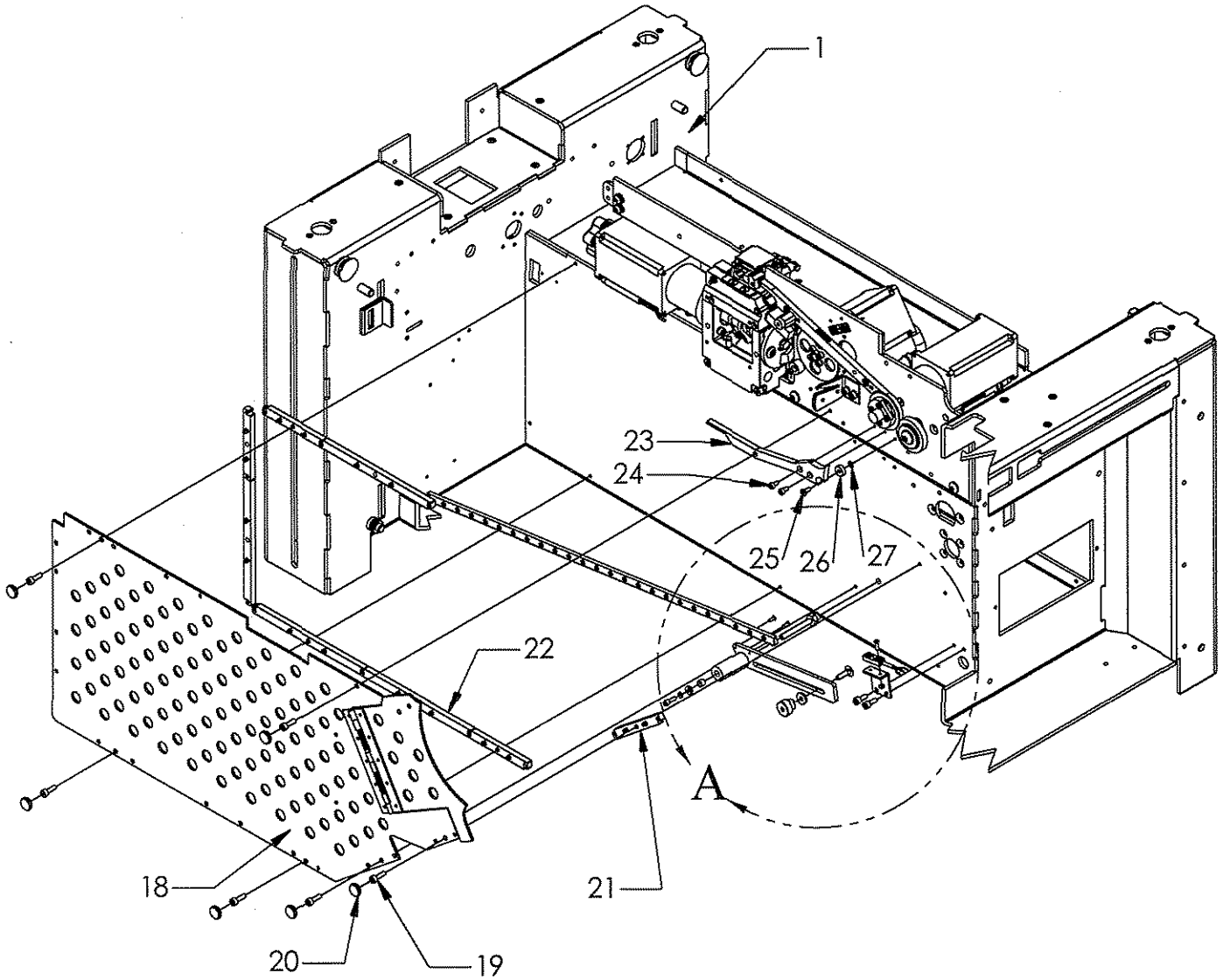

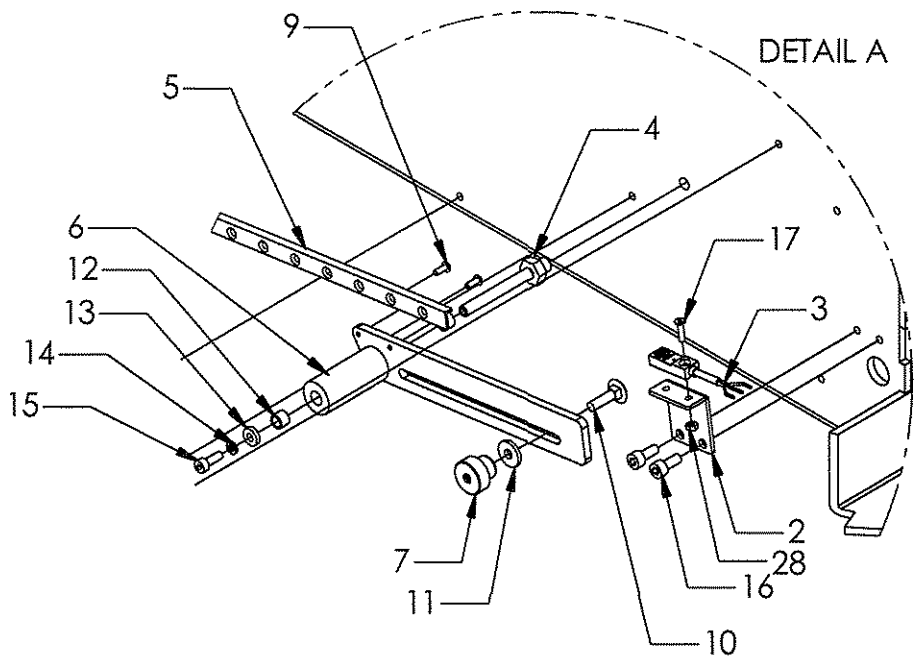

INFEED ASSEMBLY

515851-9

KEY	QTY.	PART NO.	DESCRIPTION
1	1	515800	FRAME WELDMENT
2	6	437290	M5 X 12 SFHCS
3	3	481889	M6 LOCKWASHER (ZINC)
4	1	514614	INFEED MOTOR (SILVER)
4	REF	516942	INFEED MOTOR (BLACK)
5	1	514244	INFEED WHEEL
6	2	433922	M6 X 16 SFHCS (ZINC)
7	1	434169	CLEVIS PIN
8	2	165438	M6 X 16 SHCS (ZINC)
9	1	162377	M5 X 5 SSS CUP (ZINC)
10	1	514259	INFEED GUIDE
11	1	437290	M5 X 12 SFHCS
12	1	514583	WHEEL SKIRT
13	4	185700	M4 LOCKWASHER (ZINC)
14	2	420216	M4 X 10 SHCS (ZINC)
15	1	514591	3 X 22 DOWEL PIN
16	2	274931	3 X 12 DOWEL PIN
17	1	514581	STRAP GATE
18	2	432258	M4 X 25 SHCS
19	1	010077	M6 LOCKWASHER HC (ZINC)
20	1	439920	M6 X 20 SHCS (ZINC)
21	1	251266	M8 FLATWASHER (ZINC)
22	1	010051	M8 X 20 SBHCS
23	1	514582	STRAP GUIDE HINGE-F
24	2	264452	GROOVED PIN (TYPE G) 3/16 X 1/2
25	1	515257	LE-026C-00MW EXTENSION SPRING
26	1	514584	SHOULDER WASHER

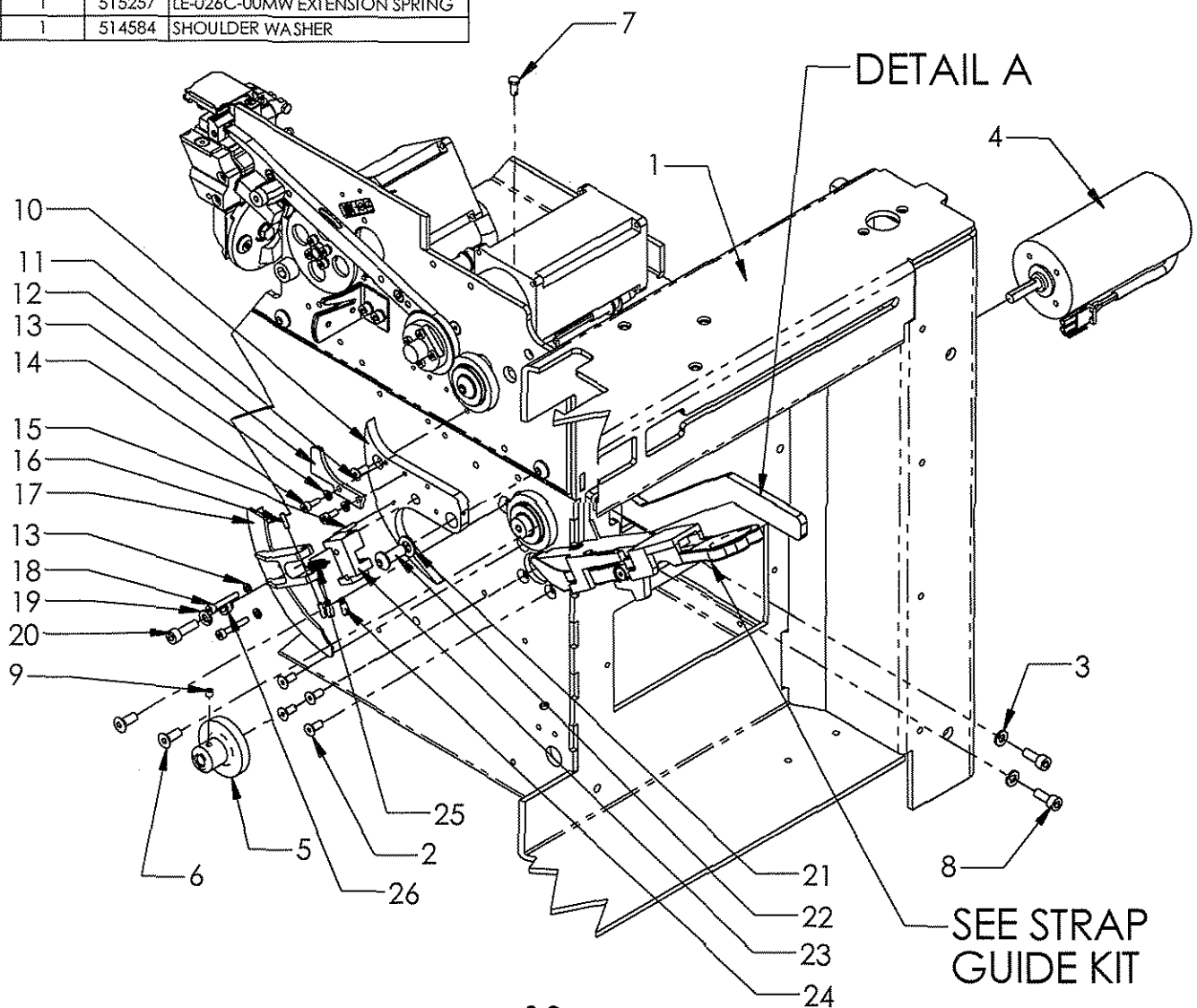

INFEED ASSEMBLY - DETAIL A

515851-9

KEY	QTY.	P/N	DESCRIPTION
1	1	514929	BEARING BLOCK
2	1	516984	PINCH WHEEL ECCENTRIC
3	1	515808	LOAD LEVER
4	1	280813	M8 H/C LOCKWASHER (ZINC)
6	REF	519245	INFEED PINCH WHEEL ASS'Y, STEEL (SEE STRAP GUIDE KIT)
6	REF	519246	INFEED PINCH WHEEL ASS'Y, URETHANE (SEE STRAP GUIDE KIT)
7	1	010078	M10 LOCKWASHER (ZINC)
8	1	514078	Ø10/M8 X 12 SHSS
9	1	514858	12ID X 15OD X 12LG FLANGE BEARING
10	1	514857	12ID X 15OD X 12LG SLEEVE BEARING
11	1	251266	M8 FLATWASHER (ZINC)
12	1	515731	M8 X 12 SHCS
13	A/R	516472	12.3 ID X 21.8 OD BELLEVILLE WASHER
14	1	281108	M6 X 25 SHCS (ZINC)
15	1	010077	M6 LOCKWASHER HC (ZINC)
16	REF	516755	INFEED SPRING(SEE STRAP GUIDE KIT)
17	REF	516756	INFEED SPRING(SEE STRAP GUIDE KIT)
17	1	005465	M6 X 1.0 HEX NUT
18	1	516399	SHIM WASHER, METRIC 10 ID X 16 OD X .1 THK
19	1	516400	SHIM WASHER, METRIC 10 ID X 16 OD X .5 THK

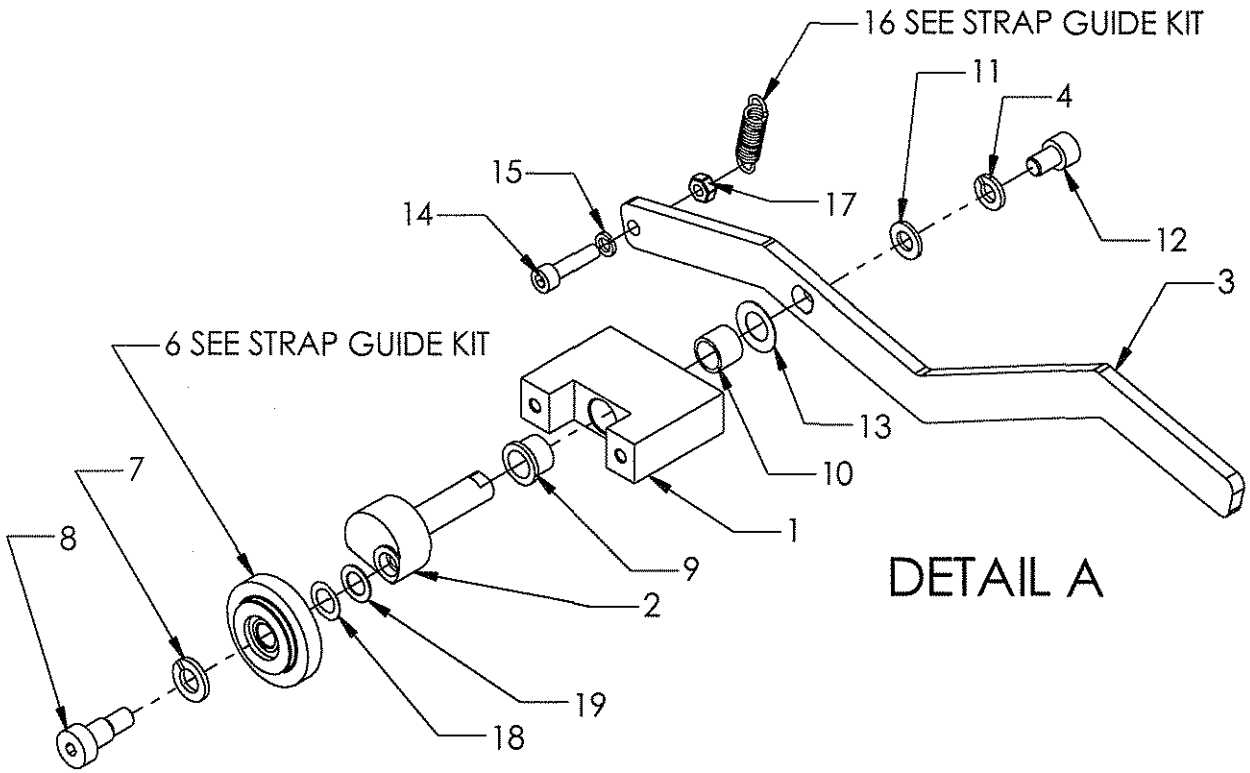

		515992 112/212 STRAP KIT W/O ACR	
KEY	QTY	P/N	DESCRIPTION
1	1	514490	CHUTE ENTRY OPTIMIZER
2	1	514489	CHUTE ENTRY BOTTOM PLATE
3	2	438103	M4 X 6 SBHCS
4	1	516350	TRACK COVER
5	1	519165	FEED & TAKE-UP SPRING OUTER
6	1	515421	INFEED TUBE ASSEMBLY
7	1	516755	INFEED SPRING
8	1	519245	PINCH WHEEL ASSEMBLY
9	1	514596	FEED & TAKE-UP SPRING INNER
10	1	516437	DISPENSER ASSY, STD FLANGE
12	1	514681	FEED & TAKE-UP PINCH WHEEL
14	1	514725	CUTTER TONGUE

516268 112/212 STRAP KIT W/ ACR	
P/N	DESCRIPTION
514490	CHUTE ENTRY OPTIMIZER
514489	CHUTE ENTRY BOTTOM PLATE
438103	M4 X 6 SBHCS
516352	TRACK COVER
519165	FEED & TAKE-UP SPRING OUTER
515421	INFEED TUBE ASSEMBLY
516755	INFEED SPRING
519245	PINCH WHEEL ASSEMBLY
514596	FEED & TAKE-UP SPRING INNER
516437	DISPENSER ASSY, STD FLANGE
514681	FEED & TAKE-UP PINCH WHEEL
514725	CUTTER TONGUE

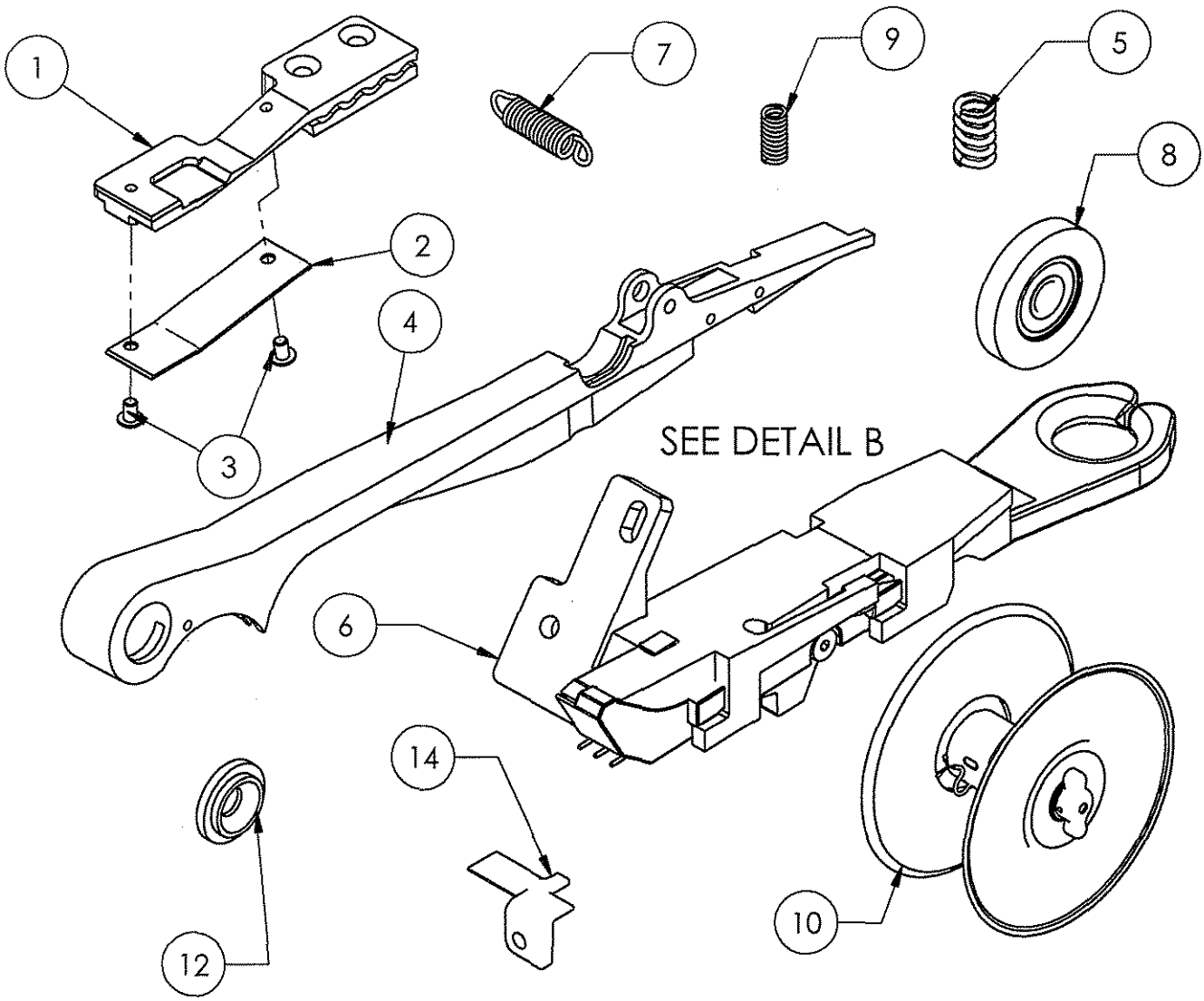

INFEED TUBE ASSEMBLY

515421-2

KEY	QTY.	PART NO.	DESCRIPTION
1	1	515419	INFEED TUBE
2	1	516391	INFEED COVER WEAR ASS'Y
3	1	515420	OUT OF STRAP LEVER
4	1	292450	Ø6/M5 X 12 SHSS
5	1	251967	M3 X 8 SFHCS
6	1	514747	SHIELDED PROX ASSEMBLY
7	1	515473	SHIM, PROX

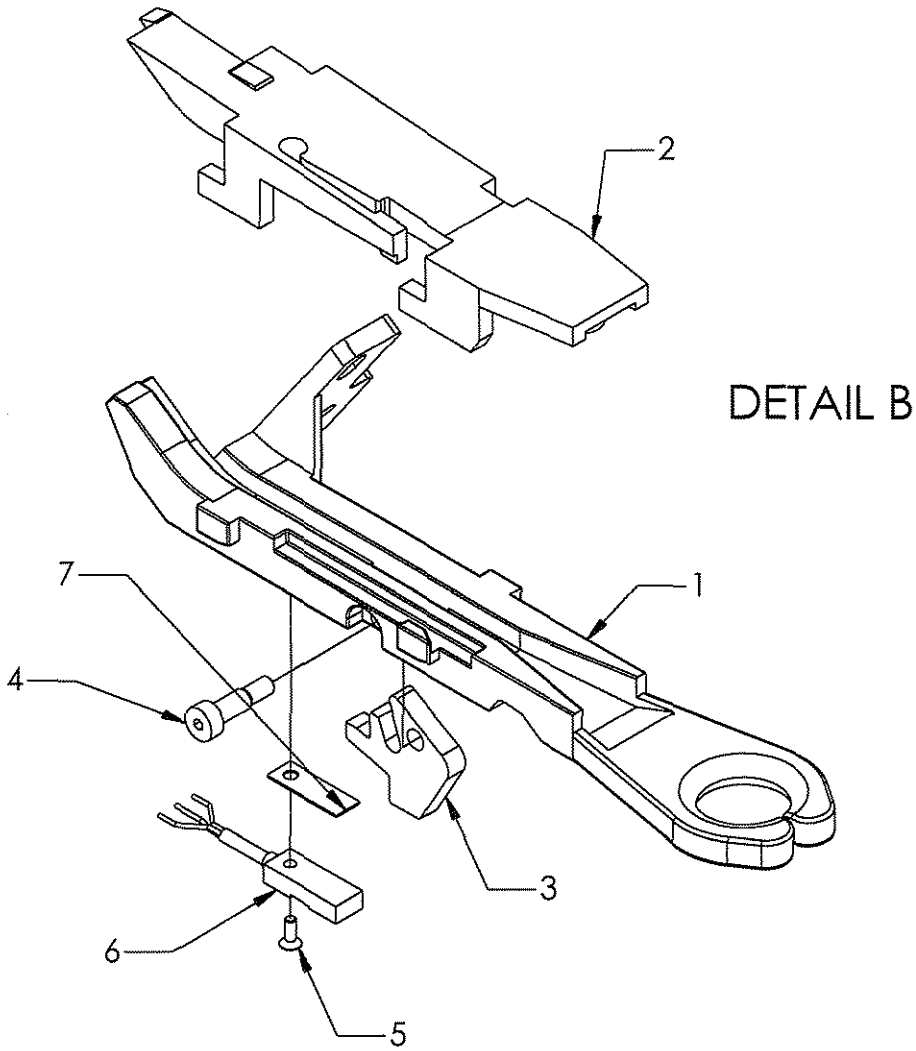

DISPENSER DOOR ASSEMBLY

KEY	QTY.	P/N	DESCRIPTION
1	1	516458	DISPENSER DOOR WELDMENT
1	REF	516460	DISPENSER DOOR WELDMENT - **CORROSION RESISTANT (GRAY)**
1	REF	516459	DISPENSER DOOR WELDMENT - **STAINLESS STEEL**
2	1	680466	PAWL LATCH
3	1	515462	RUBBER STRIP
4	1	516453	LATCH CAM (34 - 36 MM)
7	1	438400	EMERGENCY STOP SWITCH
11	1	514240	UPPER INFEED KNIFE COVER
12	1	420804	DOUBLE EDGED SLITTER
13	2	433946	M4 X 10 SBHCS (ZINC)
20	4	433919	M6 X 12 SHCS (ZINC)
24	4	010077	M6 LOCKWASHER (ZINC)

WEARING PARTS ARE THOSE ITEMS WHICH ARE UNDERLINED

NOTE: CORROSION RESISTANT AND STAINLEES STEEL MACHINES RECOMMEND THE USE OF STAINLESS STEEL HARDWARE

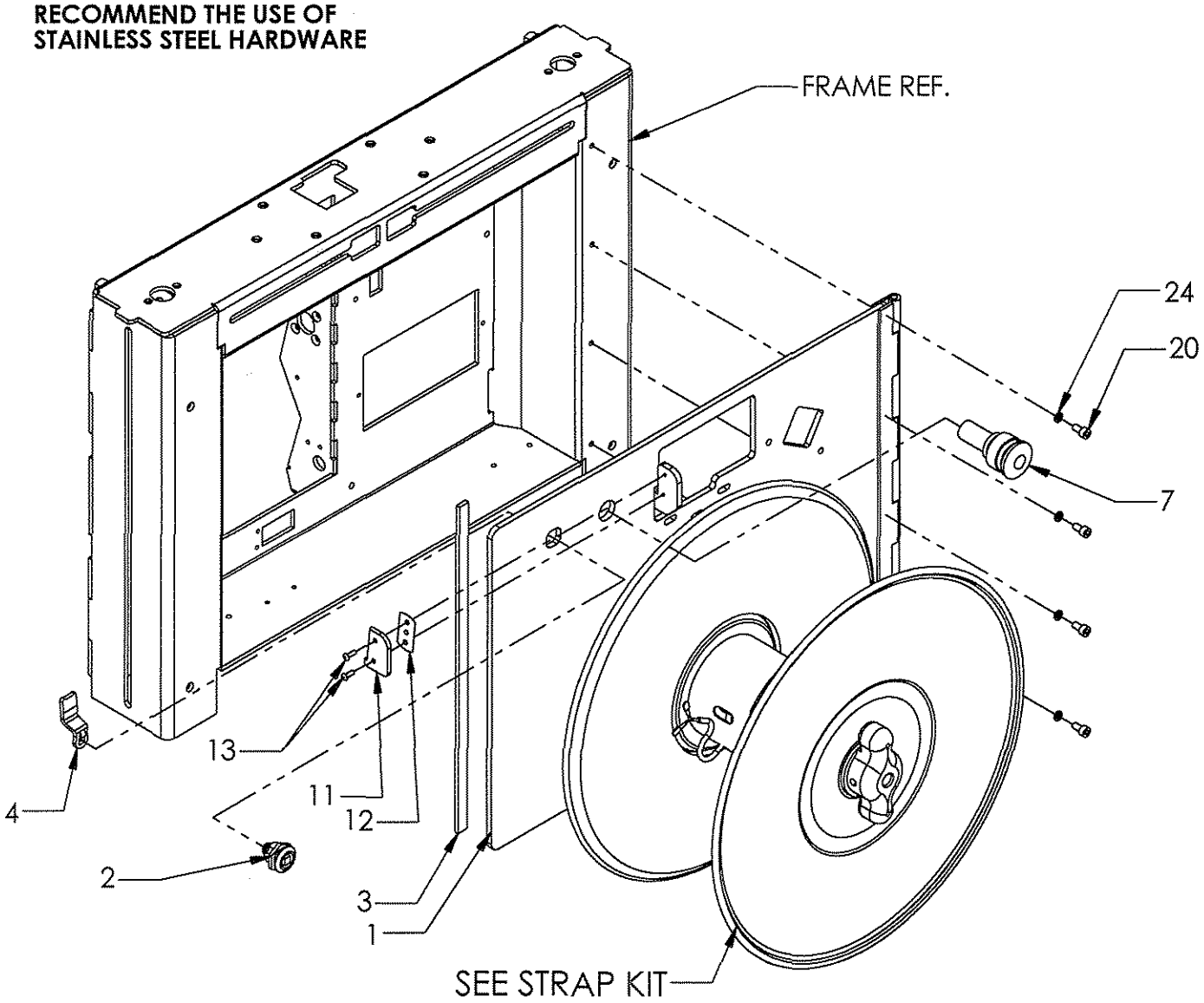

DISPENSER ASSY, STD FLANGE / BRAKE 516437-5

KEY	QTY	P/N	DESCRIPTION
1	1	515466	BEARING TUBE
2	3	281108	M6 X 25 SHCS (ZINC)
3	11	481889	M6 LOCKWASHER (ZINC)
4	3	262617	M6 FLATWASHER (ZINC)
5	1	514278	DISPENSER BRAKE
6	4	421801	M5 X 20 SBHCS (ZINC)
7	1	514277	LONG DISPENSER SHAFT
8	1	514282	DISPENSER WASHER
9	1	514284	LONG DISPENSER TIP
10	1	511222	COMPRESSION SPRING (CENTURY 11969)
11	1	437467	PIN - DISPENSER KNOB
12	1	516911	DISPENSER STOP
13	1	516929	M6 X 55 SHCS, FULLY THREADED -BLACK
14	1	005465	M6 HEX NUT (ZINC)
15	1	511177	INNER FLANGE ASSEMBLY
16	1	437458	OUTER FLANGE ASSEMBLY
17	1	437469	2" EXT. RET. RING (TA# 5100-200)
18	1	437470	DISPENSER KNOB
19	1	515493	SLIP WASHER, DISPENSER KNOB
20	3	437424	COIL SUPPORT
21	6	433919	M6 X 12 SHCS (ZINC)
22	1	293310	M6 X 6 SSS CUP (ZINC)
23	1	514279	HEX BUSHING - BRAKE
24	1	510746	20mm EXT. RET RING (TA# 5100-78)
25	1	435606	35mm EXT. RET. RING (BN 819)

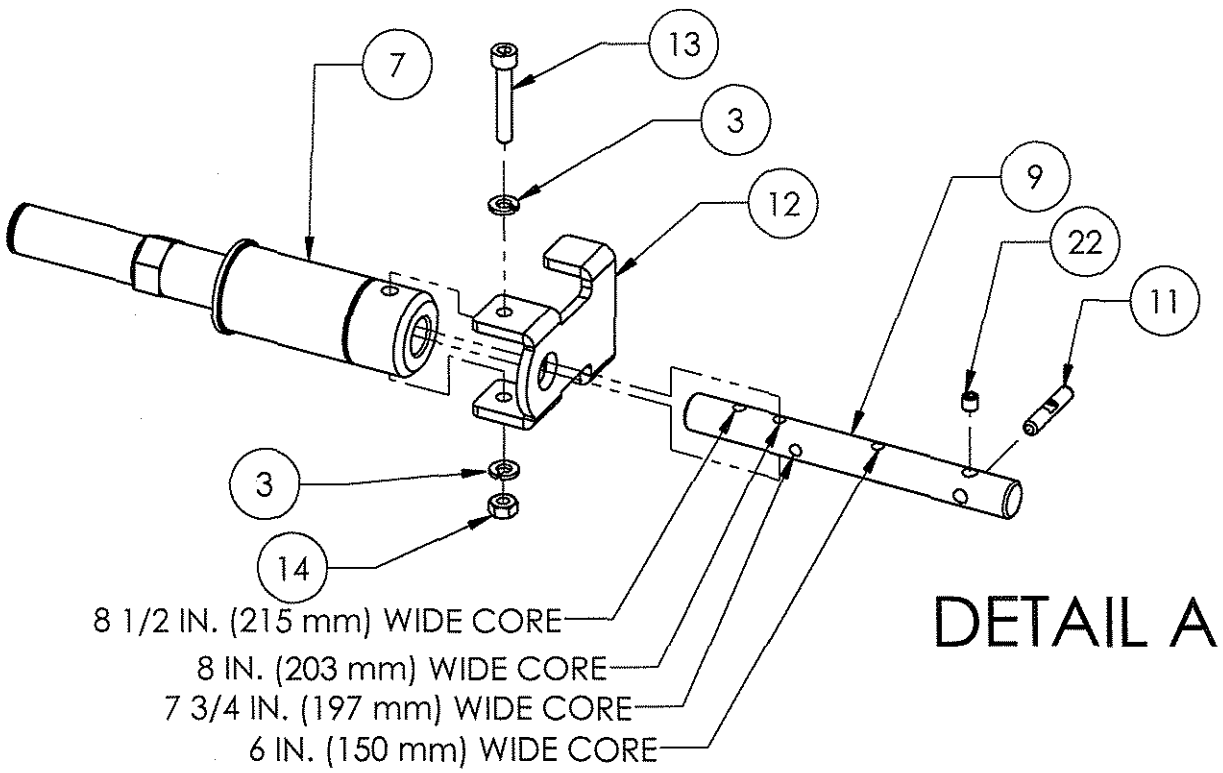

DISPENSER ASSY, STD FLANGE / BRAKE 516437-5

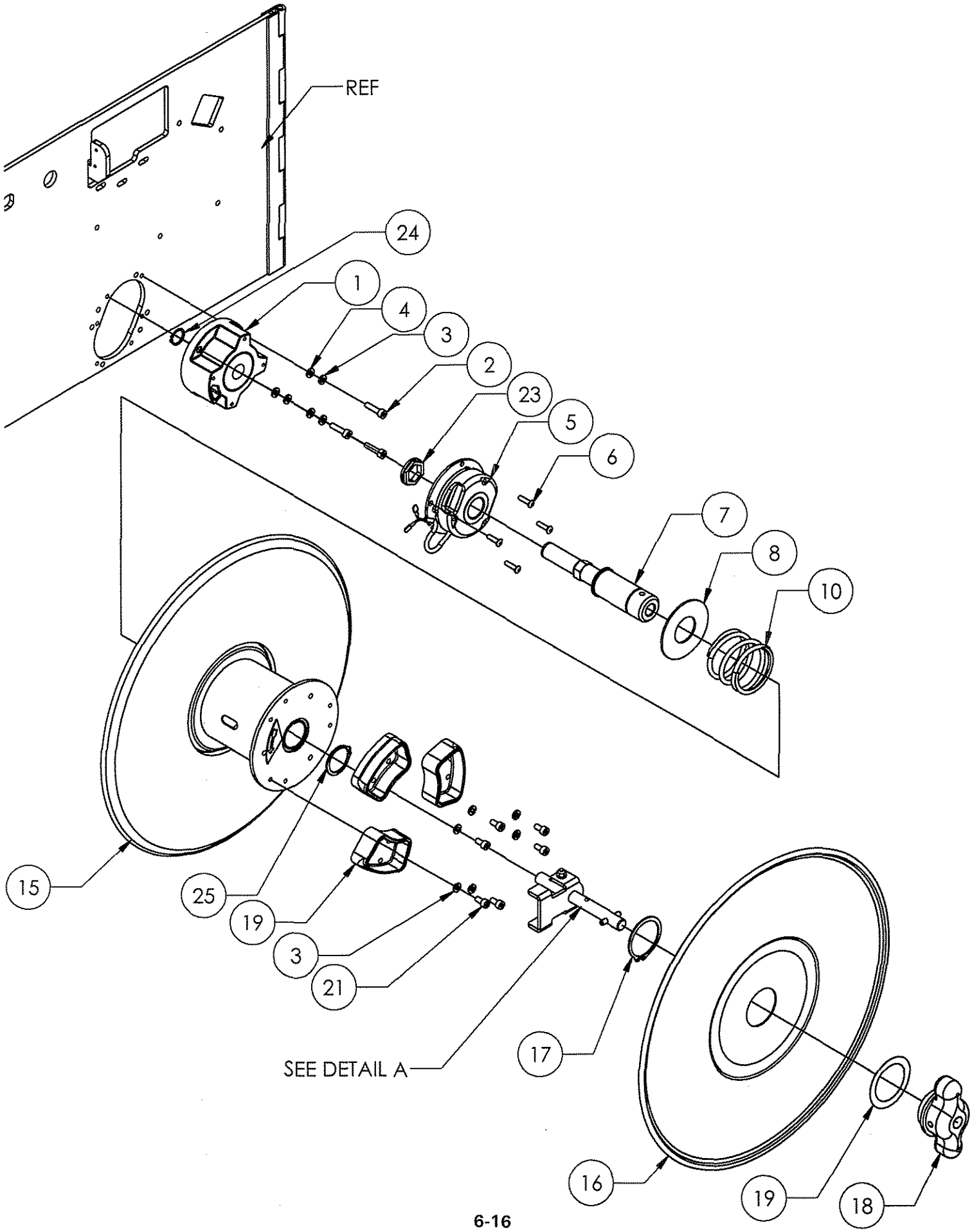

		LBX-2300 1-PHASE(STD) 515038	LBX-2300 1-PHASE 515062	LBX-2330 1-PHASE 515046	LBX-2300 3-PHASE 515039	LBX-2330 3-PHASE 515040	LBX-2300 575V 515646	LBX-2330 575V 515647
KEY	QTY	PART #	PART #	PART #	PART #	PART #	PART #	PART #
1	1	515550	515550	515551	515550	515551	515550	515551
2	REF	515509	515509	515509	515509	515509	515509	515509
3	1	434392	434392	434392	434392	434392	434392	434392
4	1	NA	NA	434386	NA	434386	NA	434386
5	1	515553	515553	515553	515553	515553	515553	515553
6	1	514805	514805	514805	514805	514805	514805	514805
7	1	515119	515119	515119	515119	515119	515119	515119
8	1	515117	515116	515116	515116	515116	515116	515116
9	4	286207	286207	286207	286207	286207	286207	286207
10	1	436376	436376	436376	436376	436376	436376	436376
11**	1	286317	286317	286317	286317	286317	286317	286317
	1	434374	434374	434374	434374	434374	434374	434374
12	REF	519337	519341	519342	519350	519352	519351	519353
13	1	NA	NA	515118	NA	515118	NA	515118
14**	1	264579	264579	264579	264579	264579	264579	264579
	1	436353	436353	436353	436353	436353	436353	436353
15	1	515115	515115	515115	515115	515115	515115	515115
16	1	434377	434377	434377	434377	434377	434377	434377
17	1	514329	514329	514329	514329	514329	514329	514329
18	2	435803	435803	435803	435803	435803	435803	435803
19	2	NA	NA	515552	NA	515552	NA	515552
20	REF	515554	515555	515555	515555	515555	515555	515555
21	REF	515625	515625	515626	515625	515626	515625	515626
22*	1	434385	434385	434385	434385	434385	434385	434385
23	1	516470	516470	516470	516470	516470	516470	516470

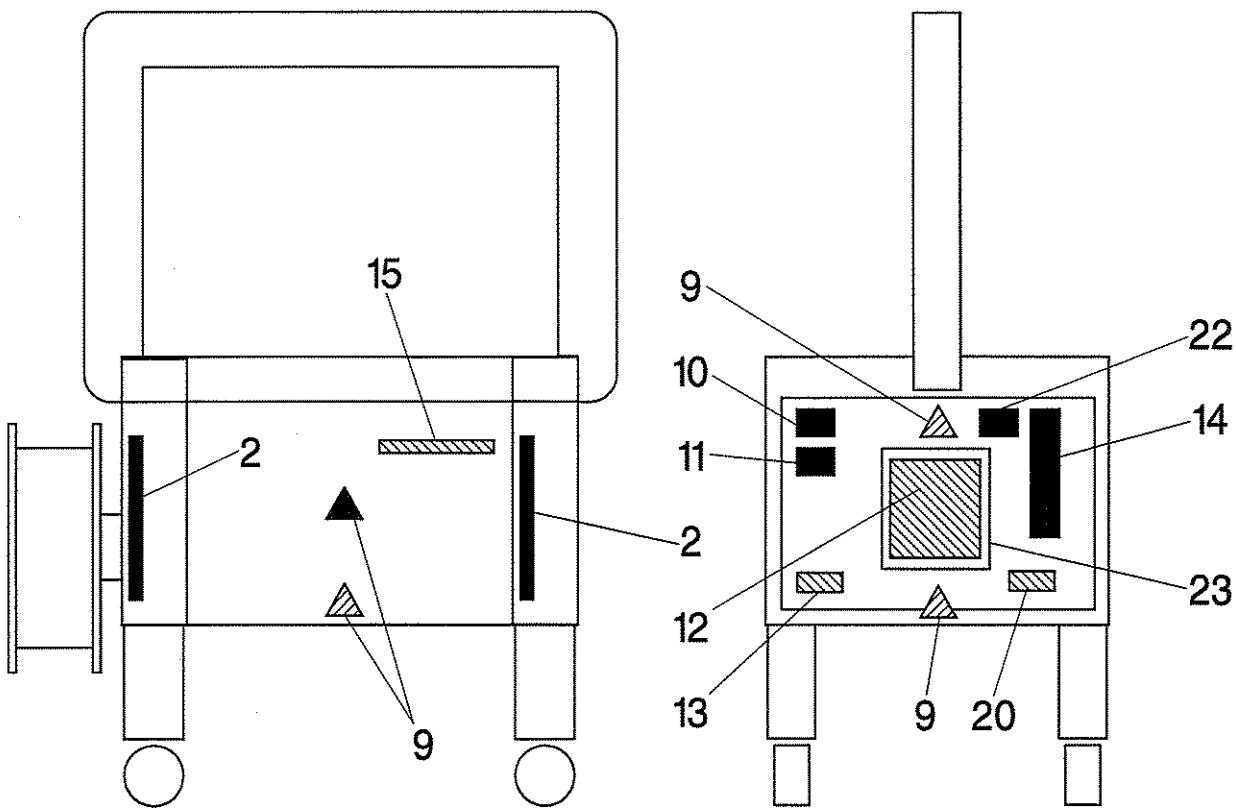

** Select appropriate label based on product's destination country.
* Apply label as required per manufacturing order.

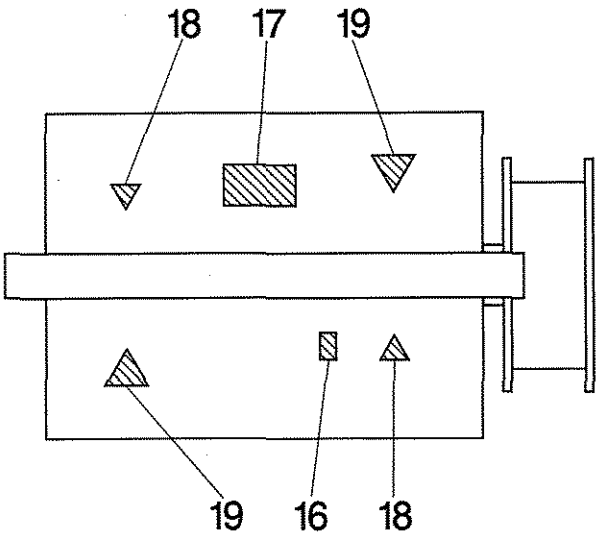

INTERNAL
EXTERNAL

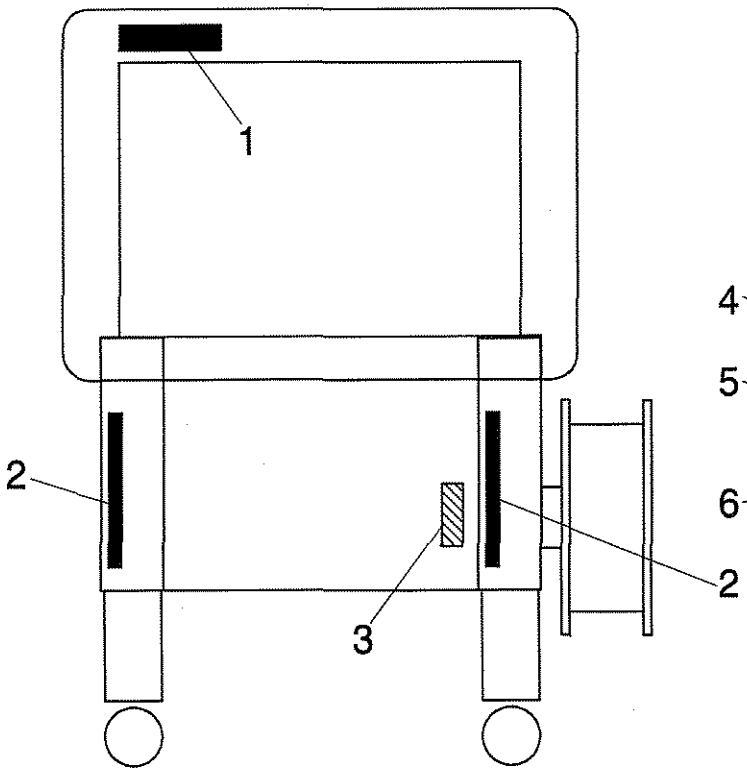

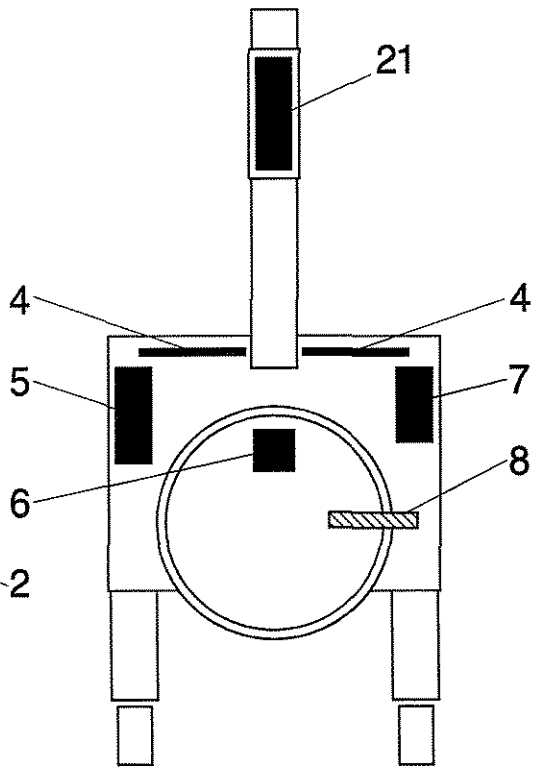

CHUTE ASSEMBLY

519054-02

CHUTE SIZE		16 X 10		20 X 15		28 X 20		33 X 30		48 X 20		48 X 48	
BILL OF MATERIAL		519046		519047		519048		519049		519050		519051	
KEY	DESCRIPTION	QTY	P/N	QTY	P/N	QTY	P/N	QTY	P/N	QTY	P/N	QTY	P/N
1	CHUTE ARCH WELDMENT	1	516581	1	516624	1	516550	1	516568	1	516600	1	516611
2	STRIPPER PIN	2	519038	2	519038	2	519038	2	519038	2	519038	2	519038
3	TAPER SPRING SPC-40159	2	516990	2	516990	2	516990	2	516990	2	516990	2	516990
4	SPRING RETAINER	2	516988	2	516988	2	516988	2	516988	2	516988	2	516988
5	STRIPPER PIN BRACKET	2	514419	2	514419	2	514419	2	514419	2	514419	2	514419
6	M8 X 25 HHCS	8	011031	8	011031	8	011031	8	011031	8	011031	8	011031
7	M8 LOCK WASHER	8	162381	8	162381	8	162381	8	162381	8	162381	8	162381
8	M8 FLAT WASHER	8	251266	8	251266	8	251266	8	251266	8	251266	8	251266
9	M6 X 12 SHCS	4	433919	4	433919	4	433919	4	433919	4	433919	4	433919
10	M6 LOCKWASHER (ZINC)	4	481889	4	481889	4	481889	4	481889	4	481889	4	481889
11	GUIDE OPENER HANDLE	1	515415	1	515415	1	515415	1	515415	1	515415	1	515415
12	VINYL GRIP	1	513175	1	513175	1	513175	1	513175	1	513175	1	513175

CHUTE ASSEMBLY

519054-02

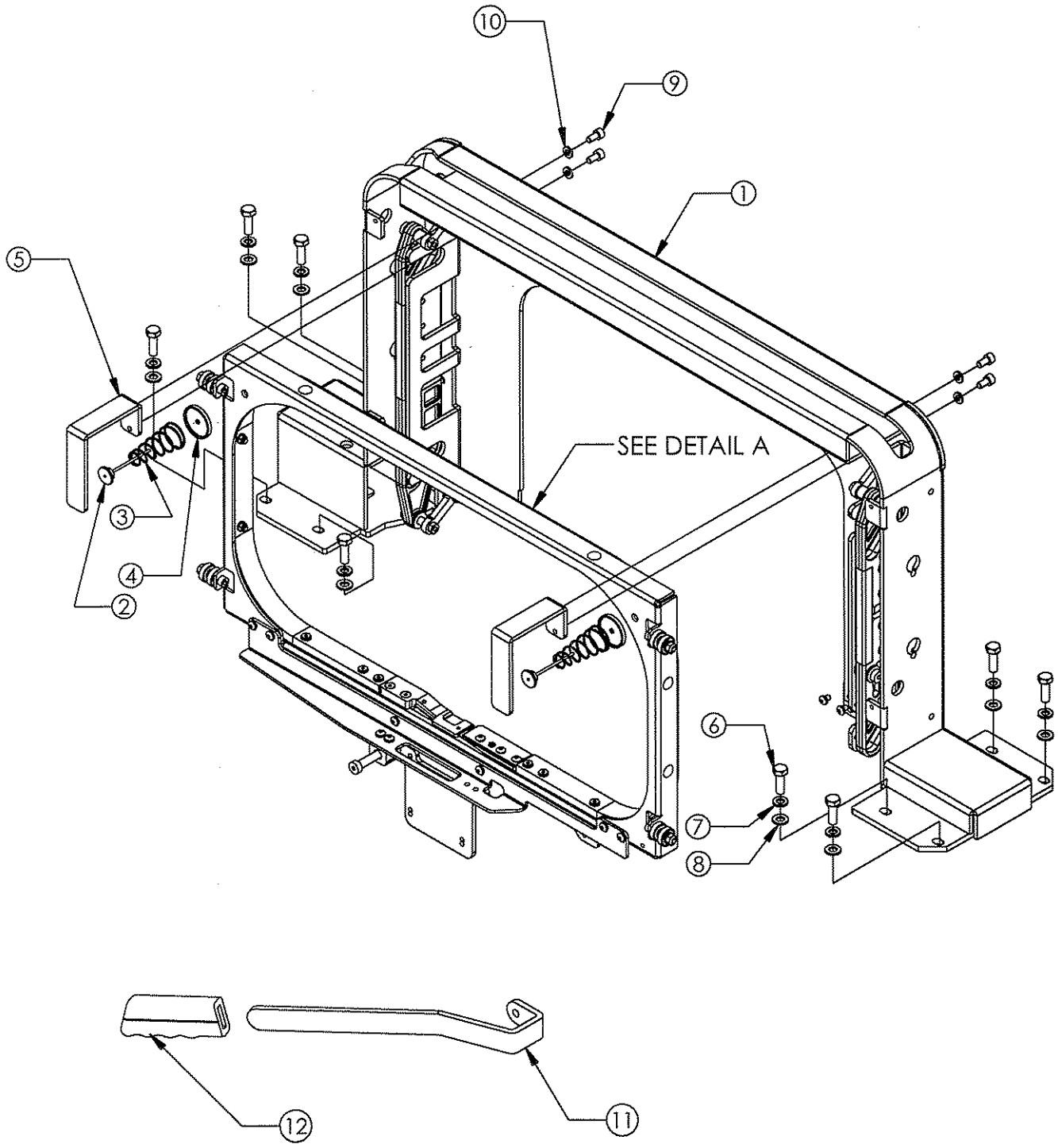

CHUTE ASSEMBLY

519054-02

CHUTE SIZE		16 X 10		20 X 15		28 X 20		33 X 30		48 X 20		48 X 48	
BILL OF MATERIAL		519046		519047		519048		519049		519050		519051	
KEY	DESCRIPTION	QTY	P/N	QTY	P/N	QTY	P/N	QTY	P/N	QTY	P/N	QTY	P/N
1	LEFT HORZ. CHUTE GUIDE	1	516587	1	519531	1	516575	1	516585	1	516575	1	516607
2	RIGHT HORZ. CHUTE GUIDE	1	516588	1	519530	1	516574	1	516586	1	516574	1	516608
3	LEFT CHUTE ACTUATOR	1	516958	1	516959	1	516960	1	515961	1	516960	1	516963
4	RIGHT CHUTE ACTUATOR	1	516952	1	516953	1	516954	1	516955	1	516954	1	516957
5	TORSION BAR WELDMENT	1	515927	1	514940	1	514938	1	515929	1	515930	1	515930
6	TORSION BAR PLATE	1	514470	1	514470	N/A	N/A	N/A	N/A	N/A	N/A	N/A	N/A
7	Ø8/M6 X 25 SHSS	3	280999	4	280999	3	280999	3	280999	3	280999	3	280999
8	Ø8/M6 X 16 SHSS	1	435951	1	435951	1	435951	1	435951	1	435951	1	435951
9	FLANGED BEARING	3	514416	4	514416	4	514416	4	514416	4	514416	4	514416
10	M6 HEX NUT (ZINC)	5	005465	6	005465	5	005465	5	005465	5	005465	5	005465
11	NYLON FLAT WASHER	3	516632	3	516632	3	516632	3	516632	3	516632	3	516632
12	Ø8/M6 X 20 SHSS	1	436604	1	436604	1	436604	1	436604	1	436604	1	436604
13	DISTANCE BUSHING	2	516635	2	516635	3	516635	3	516635	3	516635	3	516635
14	ARCH MTG. PLATE	1	514445	1	514445	1	514445	1	514445	1	514445	1	514445
15	M6 X 12 SHCS (ZINC)	4	433919	4	433919	4	433919	4	433919	4	433919	4	433919
16	M6 LOCKWASHER (ZINC)	6	481889	6	481889	6	481889	6	481889	6	481889	6	481889
17	M6 FLATWASHER (ZINC)	4	262617	4	262617	4	262617	4	262617	4	262617	4	262617
18	M6 X 16 SBHCS	2	165366	2	165366	2	165366	2	165366	2	165366	2	165366
19	PENDANT WIRE PINCH	1	515186	1	515186	1	515186	1	515186	1	515186	1	515186
20	M5 X 10 SBHCS (ZINC)	2	170118	2	170118	2	170118	2	170118	2	170118	2	170118
21	M5 LOCKWASHER (ZINC)	2	010076	2	010076	2	010076	2	010076	2	010076	2	010076
22	M8x16 SFHCS	4	438057	4	438057	4	438057	4	438057	4	438057	4	438057
23	5/16" FINISHING WASHER	4	514472	4	514472	4	514472	4	514472	4	514472	4	514472
24	JACK SHAFT WELDMENT		N/A		N/A	1	514935	1	515932	1	515934	1	515934
25	JACK SHAFT BRACKET		N/A		N/A	1	514424	1	514424	1	514424	1	514424
26	M8 LOCKWASHER (ZINC)		N/A		N/A	2	162381	2	162381	2	162381	2	162381
27	M8X12 SHCS		N/A		N/A	2	515731	2	515731	2	515731	2	515731
28	NYLON FLAT WASHER	A/R	516632	A/R	516632	A/R	516632	A/R	516632	A/R	516632	A/R	516632

CHUTE ASSEMBLY

519054-02

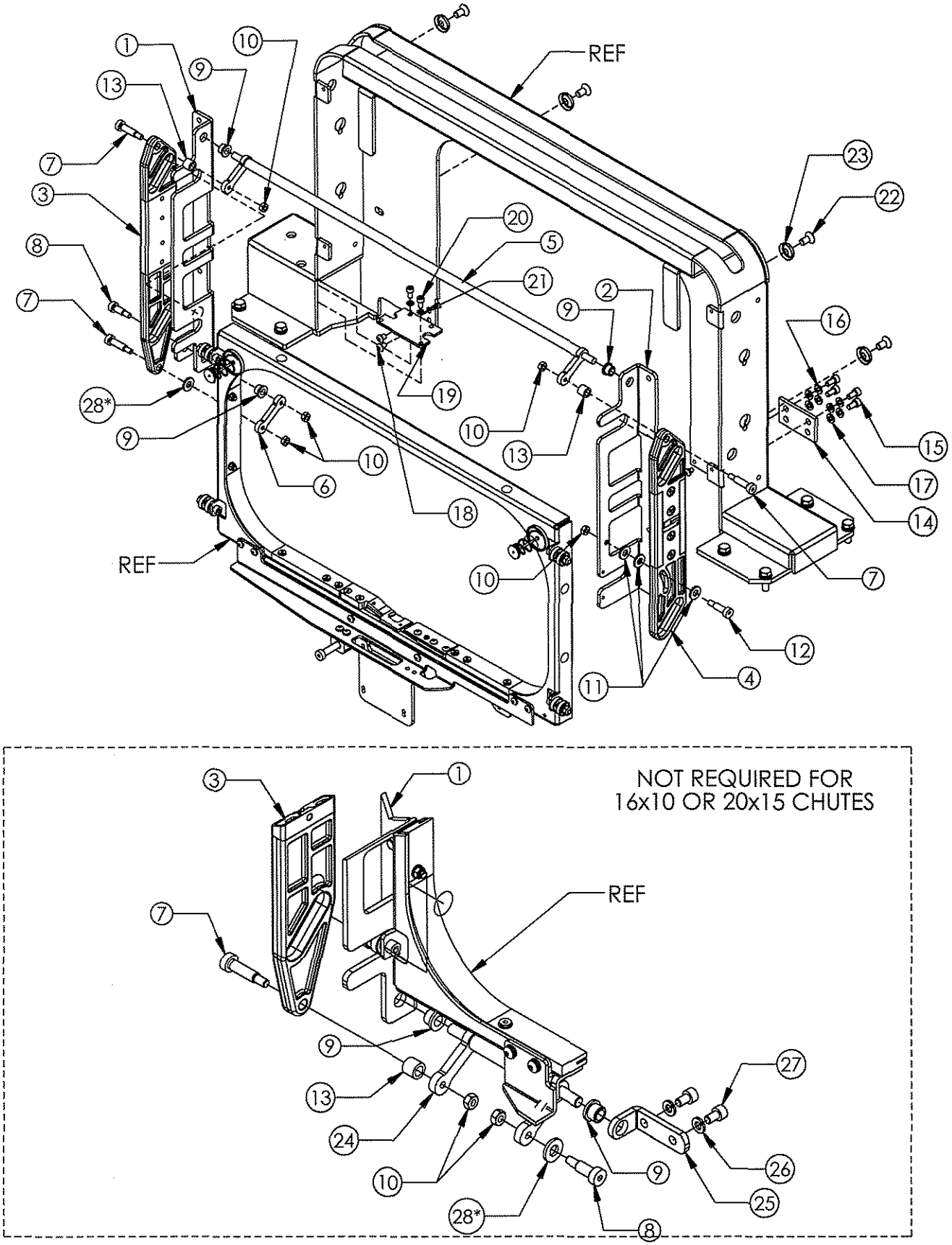

(28*) - USE AS REQUIRE, ASSEMBLY TO BE FREE / MAX. CLEARANCE 2MM

CHUTE ASSEMBLY

519054-02

CHUTE SIZE		16 X 10		20 X 15		28 X 20		33 X 30		48 X 20		48 X 48	
BILL OF MATERIAL		519046		519047		519048		519049		519050		519051	
KEY	DESCRIPTION	QTY	P/N	QTY	P/N	QTY	P/N	QTY	P/N	QTY	P/N	QTY	P/N
1	ARCH COVER	1	516580	1	515163	1	516549	1	516567	1	516599	1	516610
2	10" BRUSH ASSEMBLY	N/A	N/A	1	515203	N/A	N/A	N/A	N/A	N/A	N/A	3	515203
3	12" BRUSH ASSEMBLY	1	437996	N/A	N/A	3	437996	3	437996	N/A	N/A	3	437996
4	18" BRUSH ASSEMBLY	N/A	N/A	1	437995	N/A	N/A	1	437995	2	437995	1	437995
5	ARCH FILLER RIGHT	N/A	N/A	N/A	N/A	N/A	N/A	1	519052	1	516898	1	516898
6	M5 X 10 SFHCS (ZINC)	N/A	N/A	N/A	N/A	N/A	N/A	4	280280	4	280280	4	280280
7	ARCH FILLER LEFT	N/A	N/A	N/A	N/A	N/A	N/A	1	519053	1	516899	1	516899
8	M5 X 12 SHCS (FLANGED ZINC)	4	272418	4	272418	4	272418	4	272418	5	272418	6	272418
9	COUNTER SINK TRIM WASHER	2	514440	4	514440	6	514440	8	514440	4	514440	14	514440
10	M5 X 16 SFHCS (ZINC)	2	280279	4	280279	6	280279	8	280279	4	280279	14	280279
11	48" ARCH BRACE WELDMENT	N/A	N/A	N/A	N/A	N/A	N/A	N/A	N/A	1	516479	1	516479
12	M8 X 20 SHCS	N/A	N/A	N/A	N/A	N/A	N/A	N/A	N/A	6	160331	6	160331
13	M8 FLATWASHER (ZINC)	N/A	N/A	N/A	N/A	N/A	N/A	N/A	N/A	6	251266	6	251266
14	M8 LOCKWASHER (ZINC)	N/A	N/A	N/A	N/A	N/A	N/A	N/A	N/A	6	162381	6	162381
15	M8 HEX NUT (ZINC)	2	164953	N/A	N/A	N/A	N/A	N/A	N/A	4	164953	4	164953
16	COMPRESSION SLOT COVER	N/A	N/A	N/A	N/A	N/A	N/A	N/A	N/A	1	516118	N/A	N/A
17	M5 LOCK WASHER	N/A	N/A	N/A	N/A	N/A	N/A	N/A	N/A	4	010076	N/A	N/A
18	M5 HEX NUT	N/A	N/A	N/A	N/A	N/A	N/A	N/A	N/A	4	169440	N/A	N/A
19	M5 X 16 SBHCS (ZINC)	N/A	N/A	N/A	N/A	N/A	N/A	N/A	N/A	4	435537	N/A	N/A
21	LEFT DEFLECTOR	N/A	N/A	N/A	N/A	N/A	N/A	N/A	N/A	1	516900	1	516900
22	M6x16 SHCS	N/A	N/A	N/A	N/A	N/A	N/A	N/A	N/A	4	165438	4	165438
23	48"x20" ARCH FOOT COVER	N/A	N/A	N/A	N/A	N/A	N/A	N/A	N/A	1	516603	1	516603
24	M4x6 SBHCS (WU)	N/A	N/A	N/A	N/A	N/A	N/A	N/A	N/A	2	438103	2	438103
25	ARCH COMPRESSION COVER	N/A	N/A	N/A	N/A	N/A	N/A	N/A	N/A	1	516809	N/A	N/A
26	M8 x 25 HHCS	2	011031	N/A	N/A	N/A	N/A	N/A	N/A	N/A	N/A	N/A	N/A

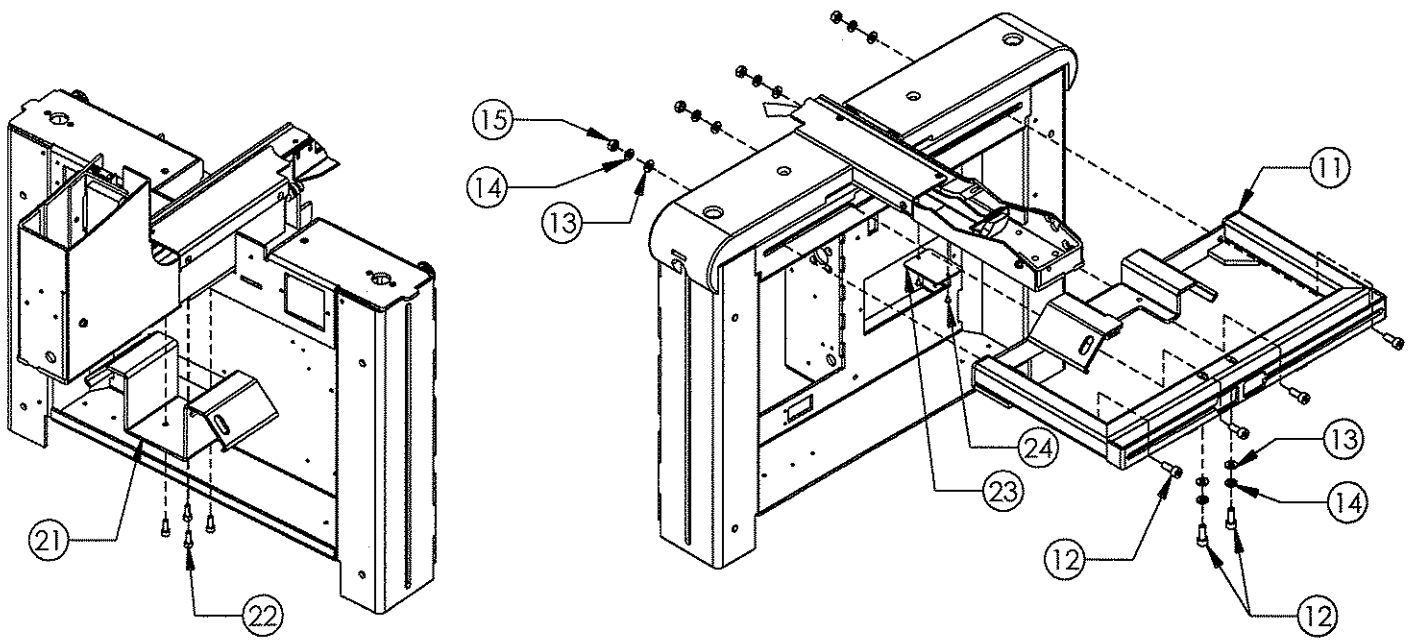

48X20 & 48X48 ONLY

CHUTE ASSEMBLY

519054-02

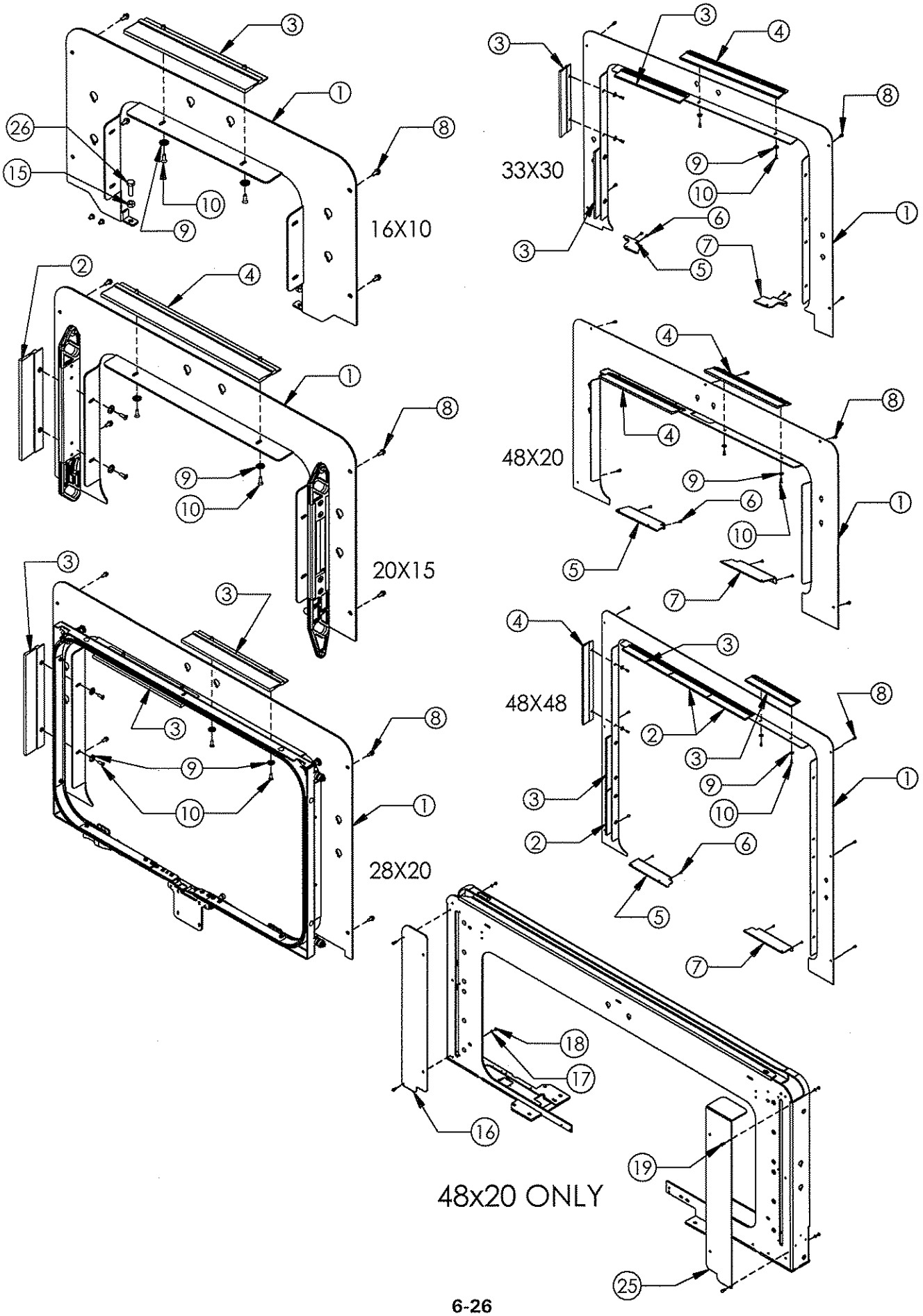

CHUTE ASSEMBLY

519054-02

CHUTE SIZE		16 X 10		20 X 15		28 X 20		33 X 30		48 X 20		48 X 48	
BILL OF MATERIAL		519046		519047		519048		519049		519050		519051	
KEY	DESCRIPTION	QTY	P/N	QTY	P/N	QTY	P/N	QTY	P/N	QTY	P/N	QTY	P/N
1	CHUTE TRACK	1	515201	1	514465	1	515207	1	515210	1	515213	1	515216
2	M5 FLATWASHER (ZINC)	21	171571	20	171571	20	171571	20	171571	20	171571	20	171571
3	BOTTOM - RE-ENTRY TRACK	1	514845	1	514845	1	514845	1	514845	1	514845	1	514845
4	RE-ENTRY STRAP SELECTOR	1	514740	1	514740	1	514740	1	514740	1	514740	1	514740
5	TOP - RE-ENTRY TRACK	1	514739	1	514739	1	514739	1	514739	1	514739	1	514739
6	M3 X 8 SHCS	1	262551	1	262551	1	262551	1	262551	1	262551	1	262551
7	M5 X 12 SBHCS (ZINC)	2	175914	2	175914	2	175914	2	175914	2	175914	2	175914
8	M5 X 8 SBHCS (ZINC)	3	421805	3	421805	3	421805	3	421805	3	421805	3	421805
9	6 ID X 19 OD X 6 WIDE BALL BEARING	8	274924	8	274924	8	274924	8	274924	8	274924	8	274924
10	M6 HEX NUT (ZINC)	8	005465	8	005465	8	005465	8	005465	8	005465	8	005465
11	M6 LOCKWASHER (ZINC)	4	481889	4	481889	4	481889	4	481889	4	481889	4	481889
12	M6 X 30 SHCS (ZINC)	4	162374	4	162374	4	162374	4	162374	4	162374	4	162374
13	M6 X 25 SHCS (ZINC)	1	281108	1	281108	1	281108	1	281108	1	281108	1	281108
14	M6 FLATWASHER	6	262617	6	262617	6	262617	6	262617	6	262617	6	262617
15	M5 X 20 SHCS SPECIAL LOW	2	515255	2	515255	2	515255	2	515255	2	515255	2	515255
16	CARRIAGE SCREW	6	515248	6	515248	6	515248	6	515248	6	515248	6	515248
17	M5 HEX LOCKNUT	8	266059	8	266059	8	266059	8	266059	8	266059	8	266059
18	M5 X 16 SHCS SPECIAL LOW	4	511049	4	511049	4	511049	4	511049	4	511049	4	511049
19	CHUTE SPACER	8	515247	8	515247	8	515247	8	515247	8	515247	8	515247
20	CHUTE FRAME	1	515267	1	515268	1	515269	1	515270	1	515271	1	515272
21	LOWER CHUTE SUPPORT	1	515895	1	515855	1	515855	1	515855	1	515855	1	515855
22	CHUTE ENTRY GUIDE	1	514438	1	514438	1	514438	1	514438	1	514438	1	514438
23	M5 X 12 SFHCS	2	437290	2	437290	2	437290	2	437290	2	437290	2	437290
24	CHUTE FLANGE SLIDE BLOCK	1	516638	1	516638	1	516638	1	516638	1	516638	1	516638
25	M5 X 10 SHCS SPECIAL LOW	2	438241	2	438241	2	438241	2	438241	2	438241	2	438241
26	M5 LOCKWASHER HC (ZINC)	6	187415	6	187415	6	187415	6	187415	6	187415	6	187415
27	M5 X 10 SBHCS (ZINC)	6	170118	6	170118	6	170118	6	170118	6	170118	6	170118
28	DI8/M6 X 50 SHSS	1	435569	1	435569	1	435569	1	435569	1	435569	1	435569
29	HEAD COVER PLATE	1	516008	1	516008	1	516008	1	516008	1	516008	1	516008

CHUTE ASSEMBLY

519054-02

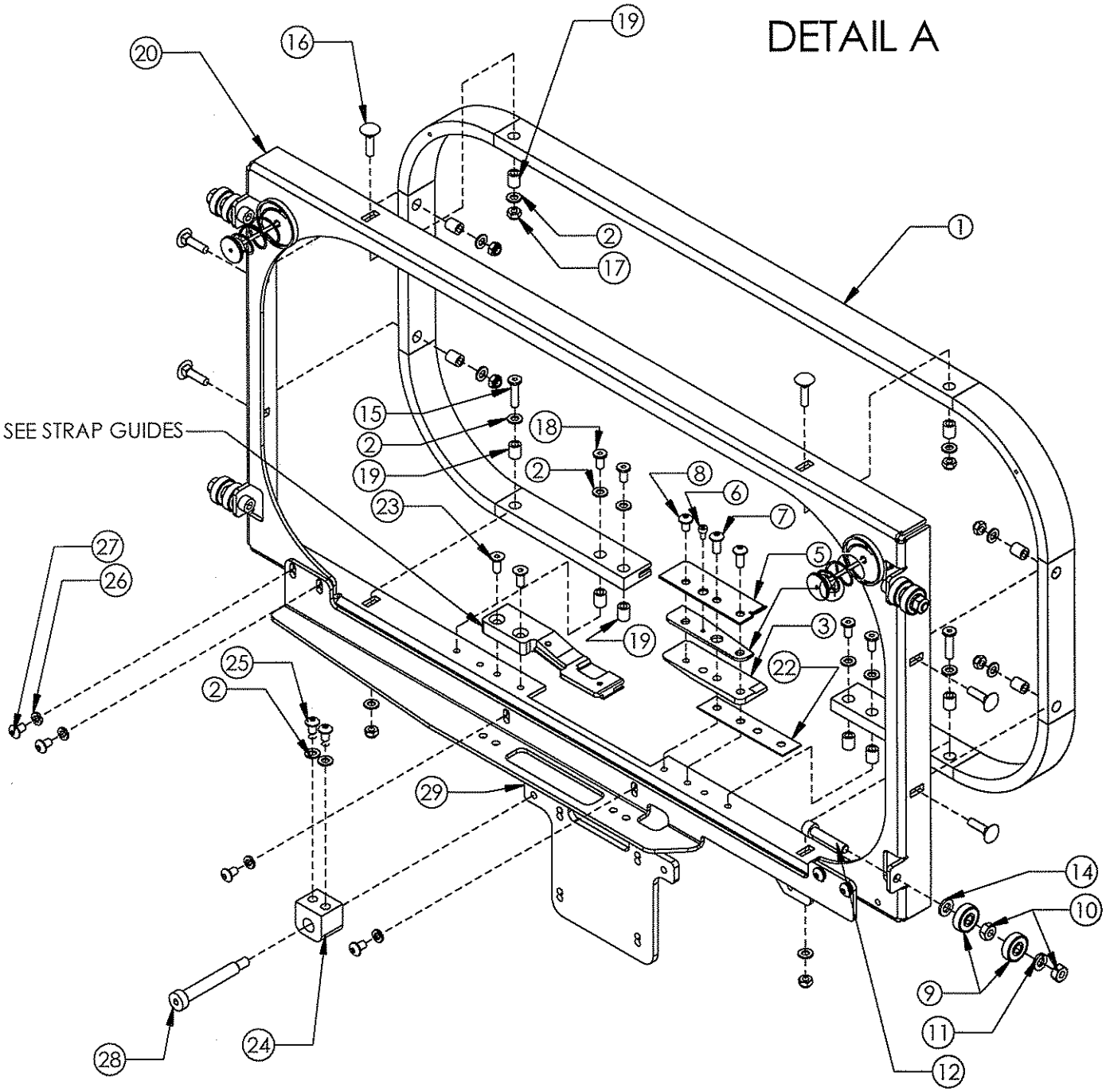

DETAIL B

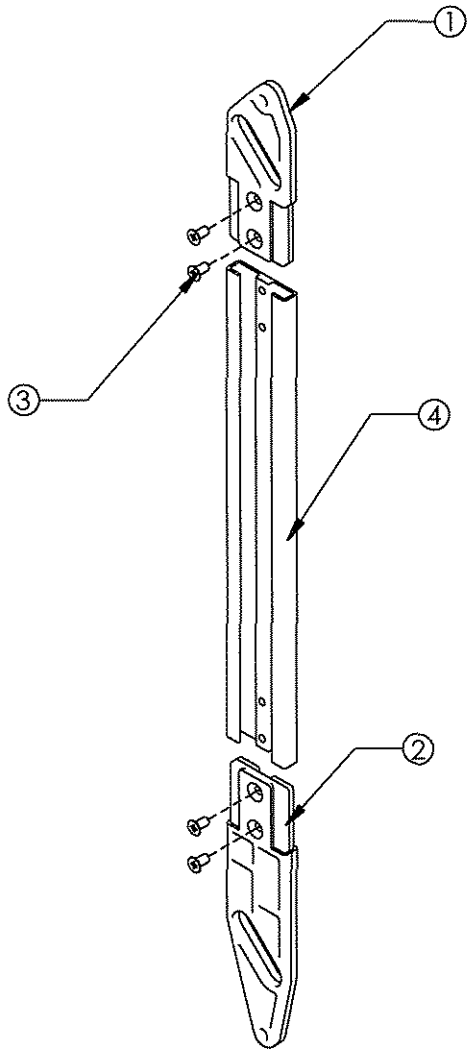

CHUTE SIZE		16 X 10		20 X 15		28 X 20		33 X 30		48 X 20		48 X 48	
BILL OF MATERIAL		516958		516959		516960		516961		516960		516963	
KEY	DESCRIPTION	QTY	P/N	QTY	P/N	QTY	P/N	QTY	P/N	QTY	P/N	QTY	P/N
1	TOP-LEFT CHUTE ACTUATOR	1	516915	1	516915	1	516915	1	516915	1	516915	1	516915
2	BOTTOM-LEFT CHUTE ACTUATOR	1	516913	1	516913	1	516913	1	516913	1	516913	1	516913
3	M6X12 FLAT HEAD THREAD FORMING	4	519240	4	519240	4	519240	4	519240	4	519240	4	519240
4	CHUTE ACTUATOR EXTRUSION	1	516917	1	516918	1	516919	1	516920	1	516919	1	516921

DETAIL C

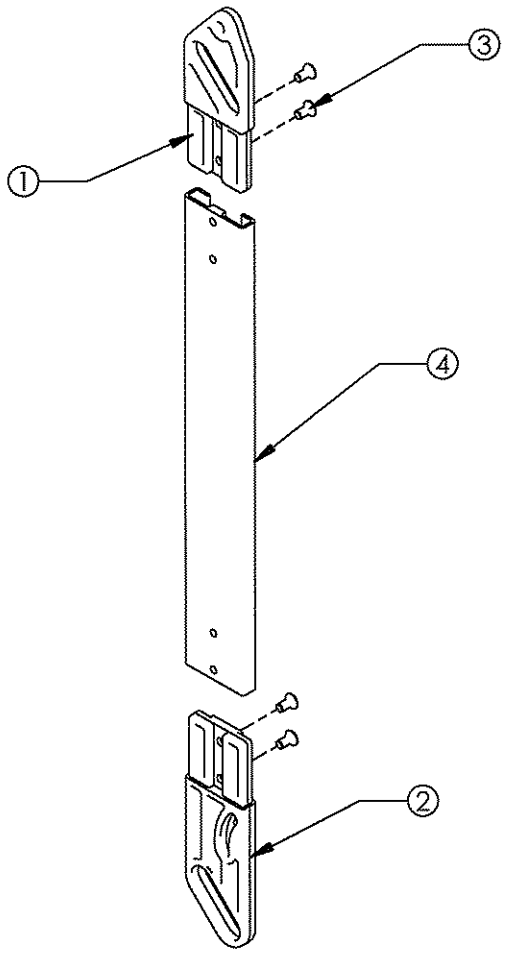

CHUTE SIZE		16 X 10		20 X 15		28 X 20		33 X 30		48 X 20		48 X 48	
BILL OF MATERIAL		516952		516953		516954		516955		516954		516957	
KEY	DESCRIPTION	QTY	P/N	QTY	P/N	QTY	P/N	QTY	P/N	QTY	P/N	QTY	P/N
1	TOP-RIGHT CHUTE ACTUATOR	1	516916	1	516916	1	516916	1	516916	1	516916	1	516916
2	BOTTOM-RIGHT CHUTE ACTUATOR	1	516914	1	516914	1	516914	1	516914	1	516914	1	516914
3	M6X12 FLAT HEAD THREAD FORMING	4	519240	4	519240	4	519240	4	519240	4	519240	4	519240
4	CHUTE ACTUATOR EXTRUSION	1	516917	1	516918	1	516919	1	516920	1	516919	1	516921

FLAT TABLE-TOPS (7 GA)

516713-3

KEY	DESCRIPTION	16" ARCH		20" ARCH		28"/33"/48" ARCH	
		516657		516658		516571	
		QTY.	PART #	QTY.	PART #	QTY.	PART #
1	ENTRY FLAT TABLE-TOP	1	516655	1	516857	1	516858
2	EXIT FLAT TABLE-TOP	1	516557	1	516854	1	516854
3	INTERLOCK SWITCH ACTUATOR	2	438752	2	438752	2	438752
4	TABLE TOP GUIDE	1	516663	2	515987	2	515987
5	M5x4 SBHCS	2	516561	4	516561	4	516561
6	M5 X 12 SFHCS (ZINC)	4	437290	4	437290	4	437290
7	M5 HEX NUT (ZINC)	4	169440	4	169440	4	169440
8	M5 LOCKWASHER (ZINC)	4	010076	4	010076	4	010076
9	M5 FLATWASHER (ZINC)	4	171571	4	171571	4	171571

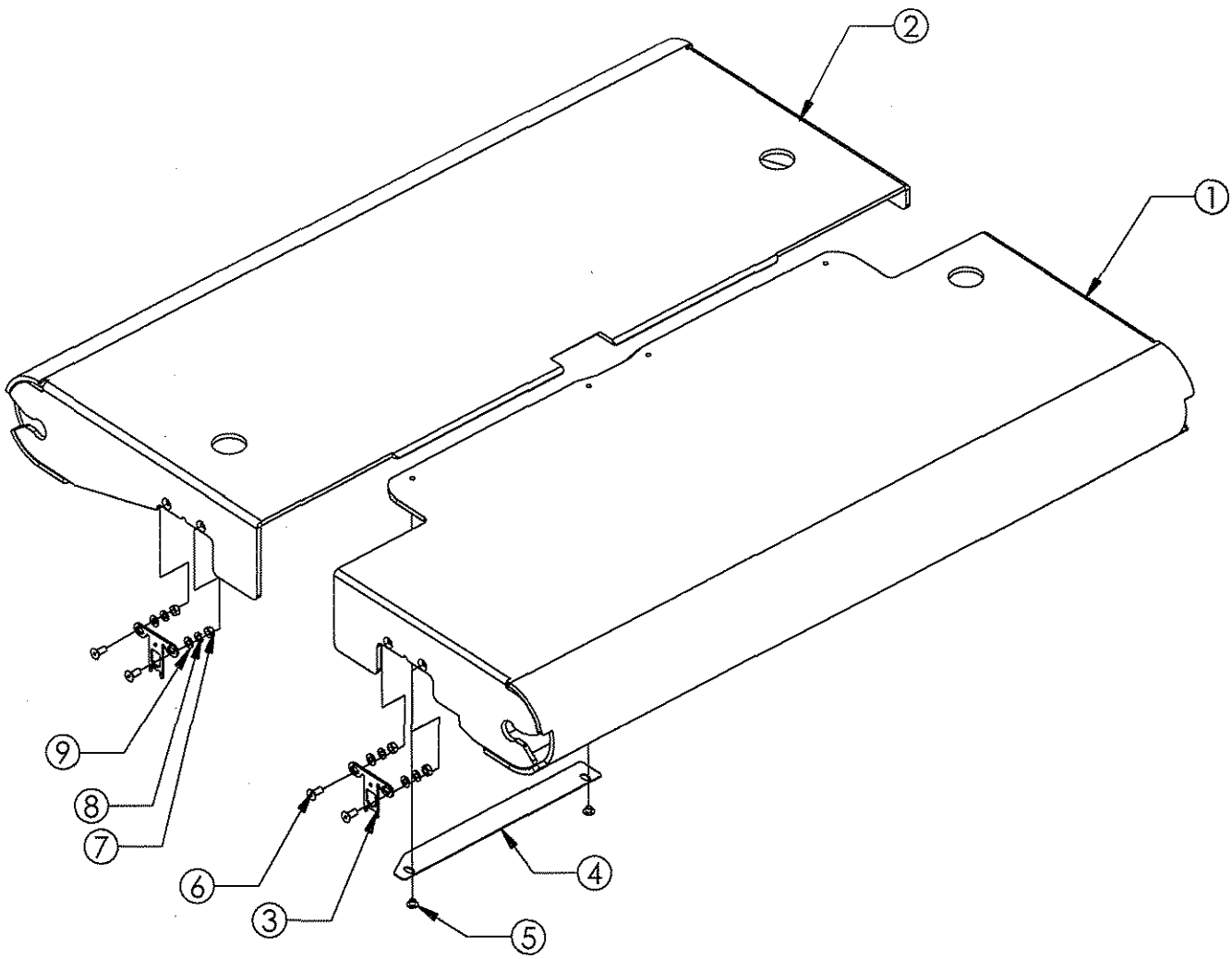

KEY	DESCRIPTION	16" ARCH		20" ARCH		28"/33"/48" ARCH	
		516661		516662		516560	
		QTY.	P/N	QTY.	P/N	QTY.	P/N
1	ENTRY ROLLER TABLE-TOP	1	516659	1	516856	1	516859
2	EXIT ROLLER TABLE-TOP	1	516559	1	516855	1	516855
3	INTERLOCK SWITCH ACTUATOR	2	438752	2	438752	2	438752
4	TABLE TOP GUIDE	1	516663	2	515987	2	515987
5	M5 X 4 SBHCS	2	516561	4	516561	4	516561
6	M5 X 12 SFHCS (ZINC)	4	437290	4	437290	4	437290
7	M5 HEX NUT (ZINC)	4	169440	4	169440	4	169440
8	M5 LOCKWASHER (ZINC)	4	010076	4	010076	4	010076
9	M5 FLATWASHER (ZINC)	4	171571	4	171571	4	171571
10	23" CONVEYOR ROLLER	5	515310	5	515310	6	515310
11	14" CONVEYOR ROLLER	1	280797	1	280797	N/A	N/A

WEARING PARTS ARE THOSE ITEMS WHICH ARE UNDERLINED

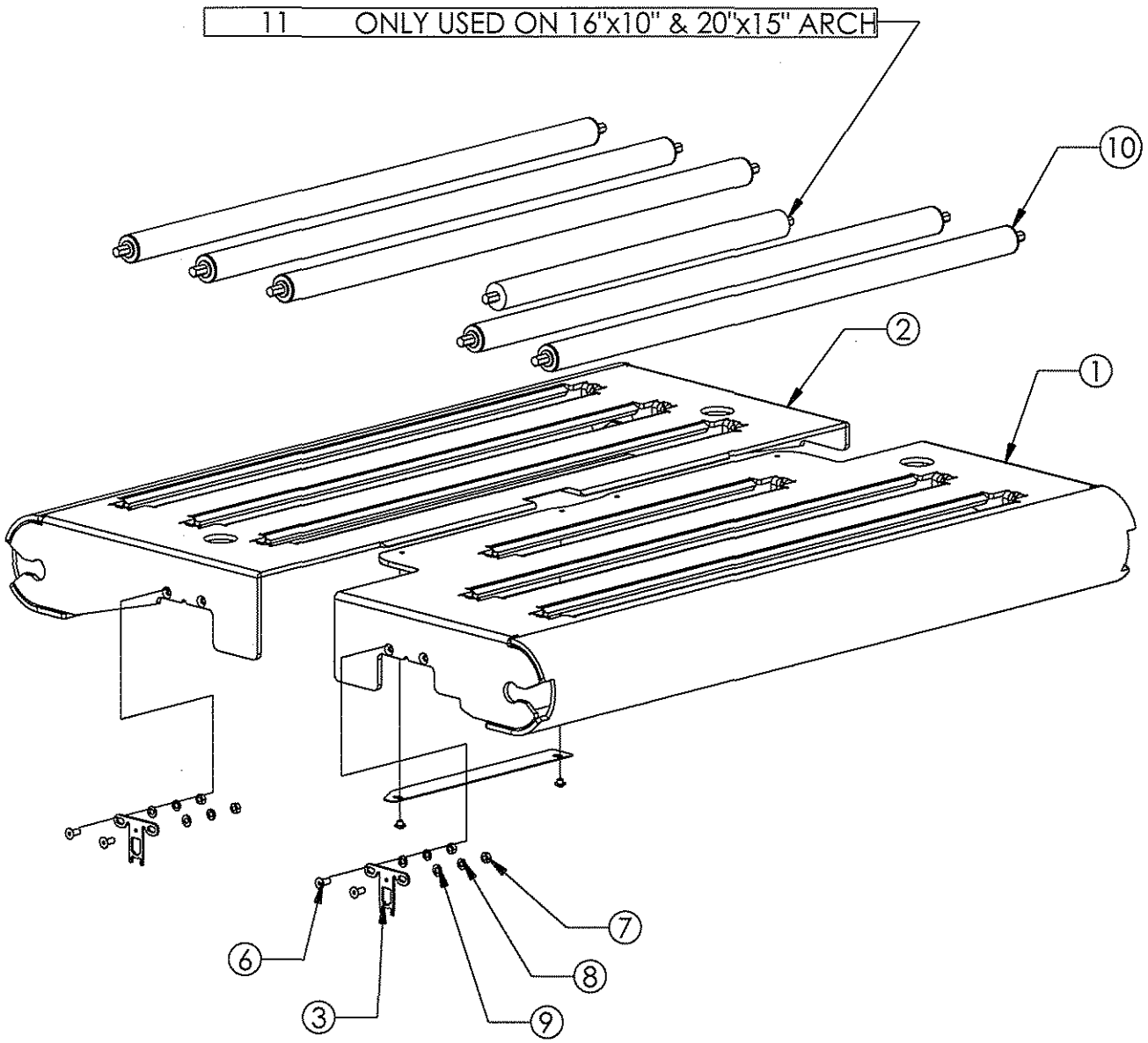

KEY	DESCRIPTION	20" ARCH 516717		28"/33" ARCH 516718		28" ARCH CR 516814		48" ARCH 516719	
		QTY.	PART #	QTY.	PART #	QTY.	PART #	QTY.	PART #
1	M5 X 16 SFHCS (ZINC)	4	280279	4	280279	4*	280279	4	280279
2	M5 LOCKWASHER (ZINC)	8	010076	8	010076	8*	010076	8	010076
3	M5 X 16 SHCS (ZINC)	4	011214	4	011214	4*	011214	4	011214
4	INTERLOCK SWITCH ACTUATOR	2	438752	2	438752	2	438752	2	438752
5	M5 FLATWASHER (ZINC)	4	171571	4	171571	4*	171571	4	171571
6	M5 HEX NUT (ZINC)	4	169440	4	169440	4*	169440	4	169440
7	M6 LOCKWASHER (ZINC)	6	481889	2	481889	2*	481889	2	481889
8	ENTRY CONVEYOR TABLE-TOP WELD.	1	516869	1	516870	1	516870SS	1	516871
9	EXIT CONVEYOR TABLE-TOP WELD.	1	516875	1	516876	1	516876SS	1	516877
10	TABLE-TOP FILLER (RH)	1	515321	N/A	N/A	N/A	N/A	N/A	N/A
11	TABLE-TOP FILLER (LH)	1	515322	N/A	N/A	N/A	N/A	N/A	N/A
12	M6 X 10 SHCS	4	281015	N/A	N/A	N/A	N/A	N/A	N/A
13	M8 X 30 HHCS (ZINC)	2	252266	N/A	N/A	N/A	N/A	N/A	N/A
14	M8 LOCKWASHER (ZINC)	2	162381	N/A	N/A	N/A	N/A	N/A	N/A
15	M8 HEX NUT (ZINC)	2	164953	N/A	N/A	N/A	N/A	N/A	N/A
16	THR. FORM SCREW 6-19 X 3/8"	8	515190	8	515190	8	515190	8	515190
17	TABLE-TOP SHIM	A/R	515254	A/R	515254	A/R	515254	A/R	515254
19	TABLE TOP GUIDE	1	515987	1	515987	1	515987	1	515987
20	M5x4 SBHCS	2	516561	2	516561	2*	516561	2	516561

NOTE:
* DENOTES THE USE OF STAINLESS STEEL HARDWEAR.

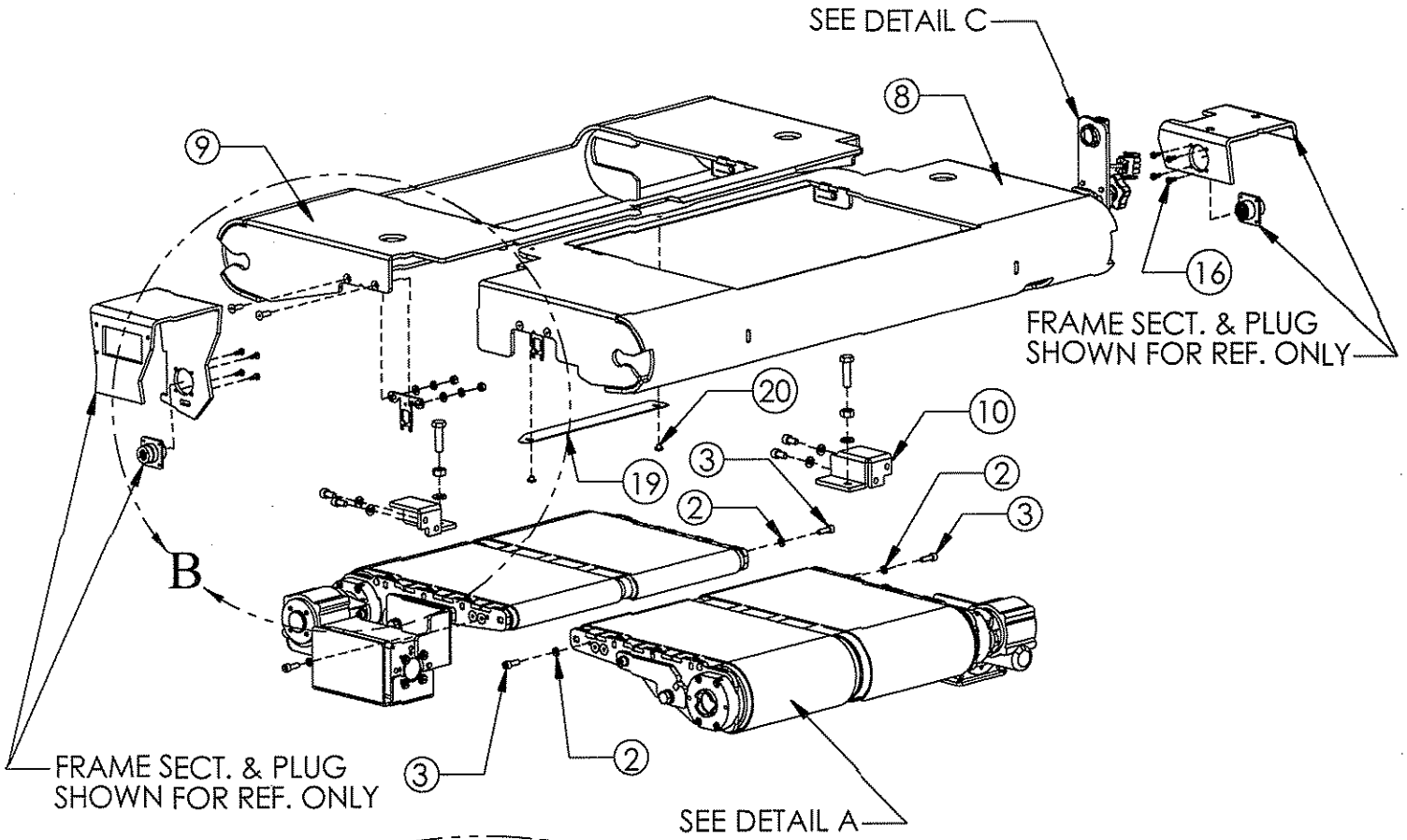
SEE DETAIL C
8
9
16
FRAME SECT. & PLUG
SHOWN FOR REF. ONLY
20
10
3
2
19
2
3
B
FRAME SECT. & PLUG
SHOWN FOR REF. ONLY
3
2
SEE DETAIL A

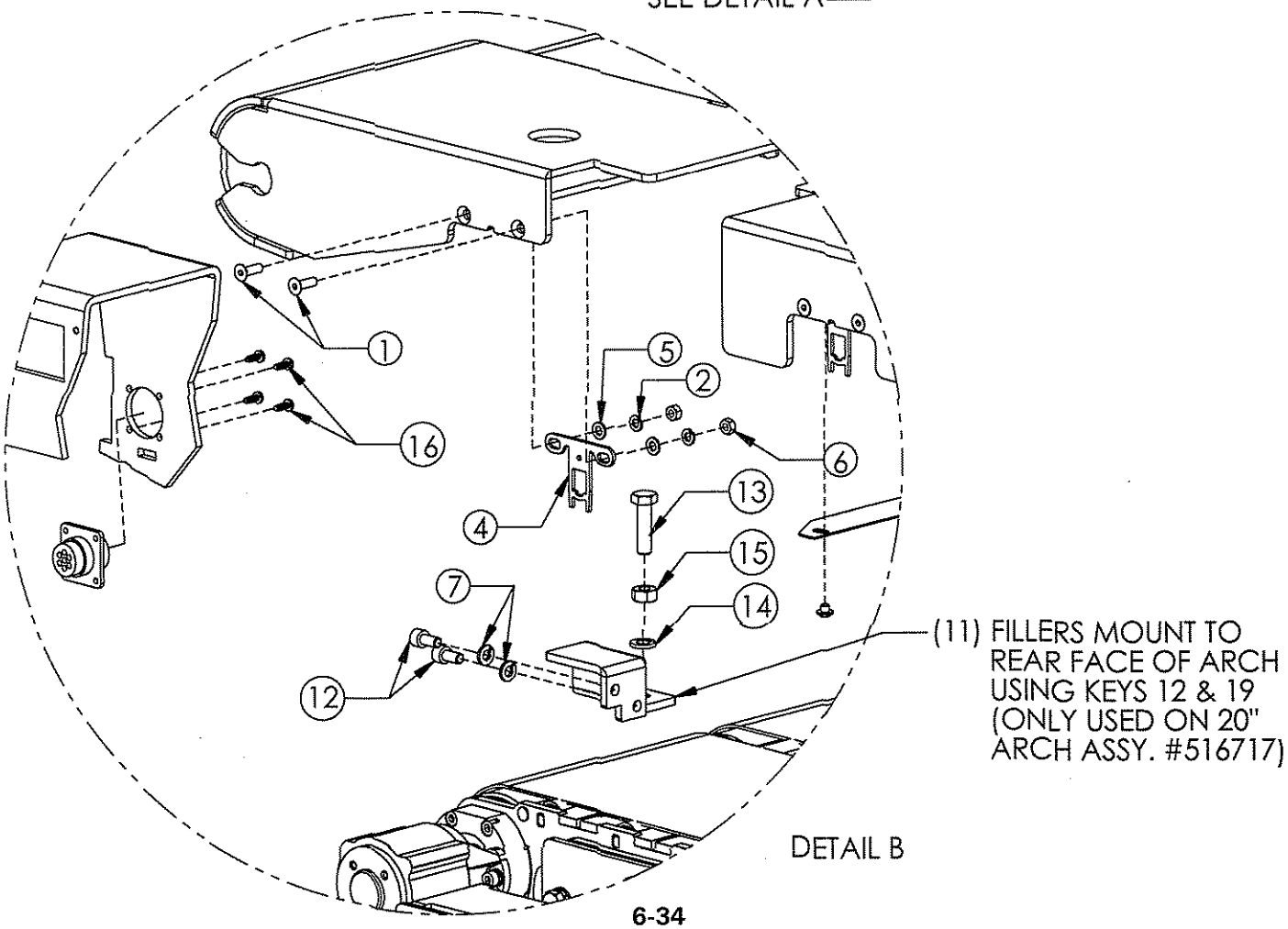
1
5
2
16
6
13
4
15
7
14
(11) FILLERS MOUNT TO
REAR FACE OF ARCH
USING KEYS 12 & 19
(ONLY USED ON 20"
ARCH ASSY. #516717)
12
DETAIL B

AUTO CONVEYOR TABLE-TOPS

516720-6

NOTE: SECTION VIEW OF MACHINE AND
COMPONENTS WITHOUT KEY #'S
SHOWN FOR REFERENCE ONLY

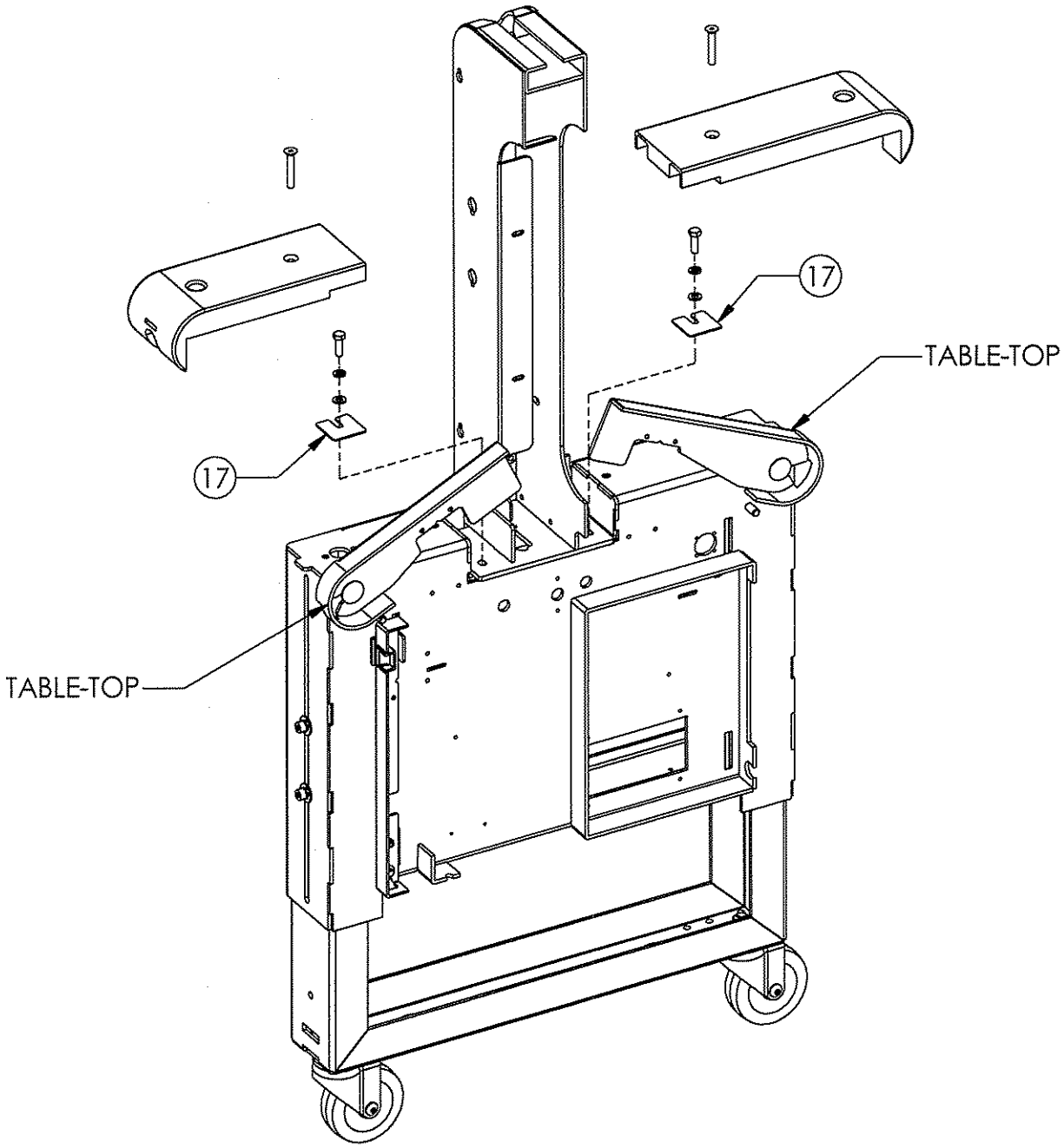

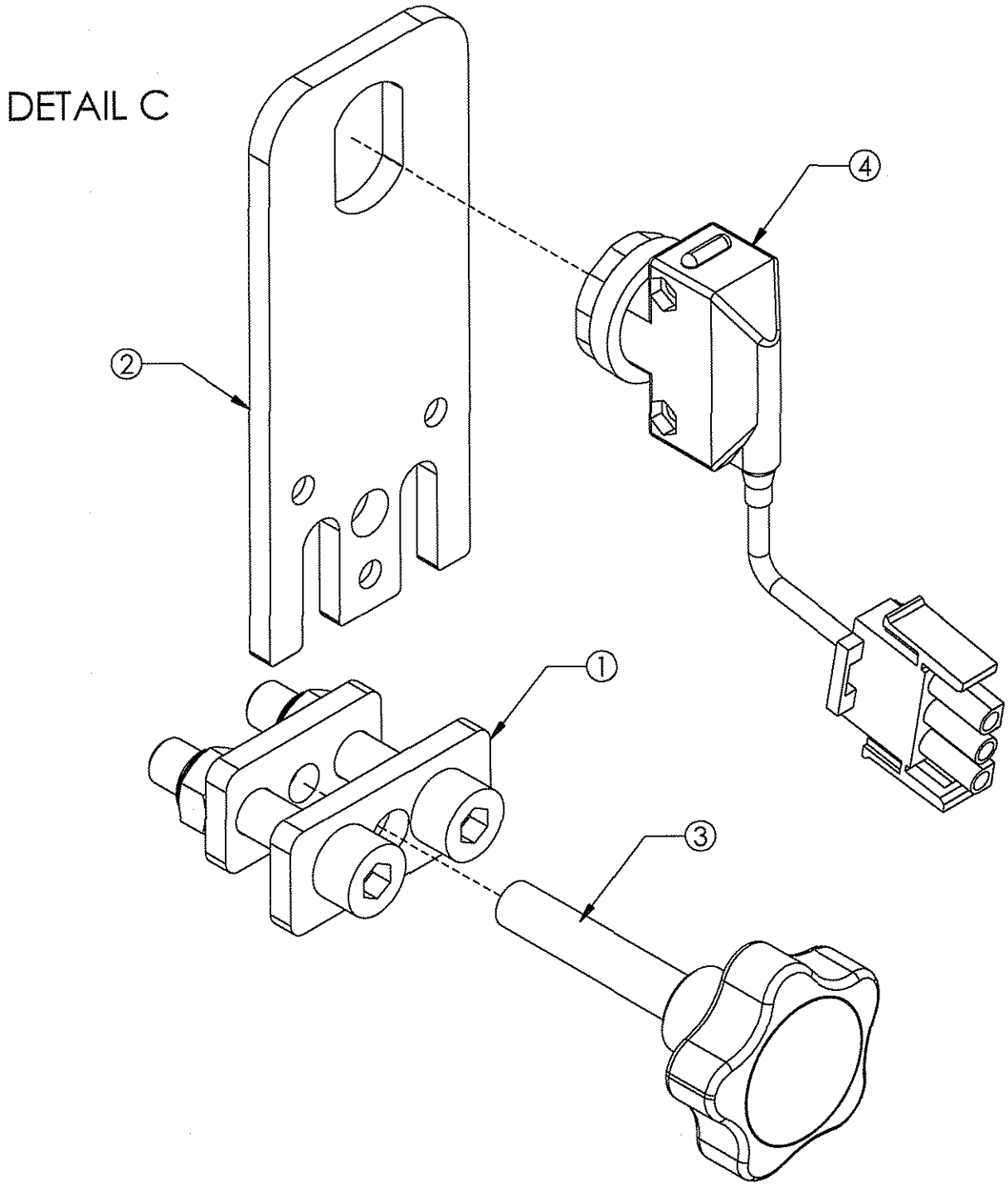

KEY	DESCRIPTION	20" ARCH		28/33" ARCH		28" ARCH CR		48" ARCH	
		516717		516718		516814		516719	
		QTY.	PART #	QTY.	PART #	QTY.	PART #	QTY.	PART #
1	CLAMP BRACKET ASSEMBLY	1	515984	1	515984	1	515984	1	515984
2	PHOTO EYE BRACKET	1	515976	1	515976	1	515976	1	515976
3	CLAMPING KNOB	1	516312	1	516312	1	516843	1	516312
4	PHOTOELECTRIC SENSOR ASSY.	1	515988	1	515988	1	515988	1	515988

KEY	DESCRIPTION	20" ARCH 516717		28/33" ARCH 516718		28" ARCH CR 516814		48" ARCH 516719	
		QTY.	PART #	QTY.	PART #	QTY.	PART #	QTY.	PART #
1	CONVEYOR FRAME SIDE, LEFT	2	515523	2	515523	2	516815	2	515523
2	TENSION ROLLER SHAFT	2	515495	2	515495	2	516816	2	515485
3	TENSION ROLLER TUBE	2	515494	2	515494	2	516817	2	515492
4	BALL BEARING	4	421210	4	421210	4	516818	4	421210
5	SPACER	4	421294	4	421294	4	516819	4	421294
6	BEARING CAP	2	438362	2	438362	2	438956	2	438362
7	BELT TENSION CAM	4	515522	4	515522	4	516821	4	515522
8	CONVEYOR DRIVE ROLLER	2	515264	2	515264	2	515264	2	515265
9	BEARING	4	293636	4	293636	4	516822	4	293636
10	ROLLER TUBE	6	515497	6	515497	6	516823	6	515468
11	ROLLER SHAFT	6	515498	6	515498	6	516824	6	515469
12	BALL BEARING	12	515499	12	515499	12	516825	12	515499
13	M6 FLATWASHER (ZINC)	12	262617	12	262617	12	262617	12	262617
14	CONVEYOR FRAME BRACE	2	515488	2	515488	2	516826	2	515487
15	M6 X 16 SFHCS (ZINC)	8	433922	8	433922	* 8	433922	8	433922
16	CONVEYOR NOSE ROLLER	2	515486	2	515486	2	516827	2	515490
17	NOSE ROLLER SHAFT	2	515489	2	515489	2	516828	2	515491
18	BEARING	8	434092	8	434092	8	516829	8	434092
19	M8 FLATWASHER (ZINC)	8	251266	8	251266	* 8	251266	8	251266
20	M8 X 16 HHCS	2	172945	2	172945	*2	172945	2	172945
21	M8 LOCKWASHER (ZINC)	4	162381	4	162381	* 4	162381	4	162381
22	M6 X 14 SHCS	2	254411	2	254411	* 2	254411	2	254411
23	M6 LOCKWASHER (ZINC)	4	481889	4	481889	* 4	481889	4	481889
24	CONVEYOR FRAME SIDE, RIGHT	2	515524	2	515524	2	516830	2	515524
25	GEARMOTOR, BRUSHLESS DC	2	515260	2	515260	2	515260	2	515260
26	MOTOR MOUNT	2	515829	2	515829	2	515829	2	515829
27	BEARING CAP	2	515871	2	515871	2	516831	2	515871
29	M5 X 12 SHCS (ZINC)	2	010028	2	010028	* 2	010028	2	010028
30	FILLER PLATE	6	515471	6	515471	6	515471	6	515548
31	M5 X 16 SHCS (ZINC)	16	011214	16	011214	* 16	011214	16	011214
32	M5 LOCKWASHER HC (ZINC)	18	187415	18	187415	* 18	187415	18	187415
33	M4 X 12 SHCS	8	165317	8	165317	* 8	165317	8	165317
34	M4 LOCKWASHER HC (ZINC)	8	185700	8	185700	* 8	185700	8	185700
35	M5 FLAT WASHER	2	171571	2	171571	* 2	171571	2	171571
36	SELF TRACKING BELT	4	438460	4	438460	6	515368	6	515368
38	SPIDER	2	515830	2	515830	2	515830	2	515830
39	MOTOR COVER	2	516303	2	516303	2	516303	2	516303
40	M5 X 12 THREAD FORMING	8	516304	8	516304	8*	516304	8	516304
41	CONV MOTOR BRACKET	2	519525	2	519525	2	519525	2	519525
42	M8X20 HHCS	2	252261	2	252261	2	252261	2	252261
43	M6X18 SHCS	2	010035	2	010035	2	010035	2	010035

NOTE:
* DENOTES ALL HARDWEAR TO BE STAINLESS STEEL.

WEARING PARTS ARE THOSE ITEMS WHICH ARE UNDERLINED

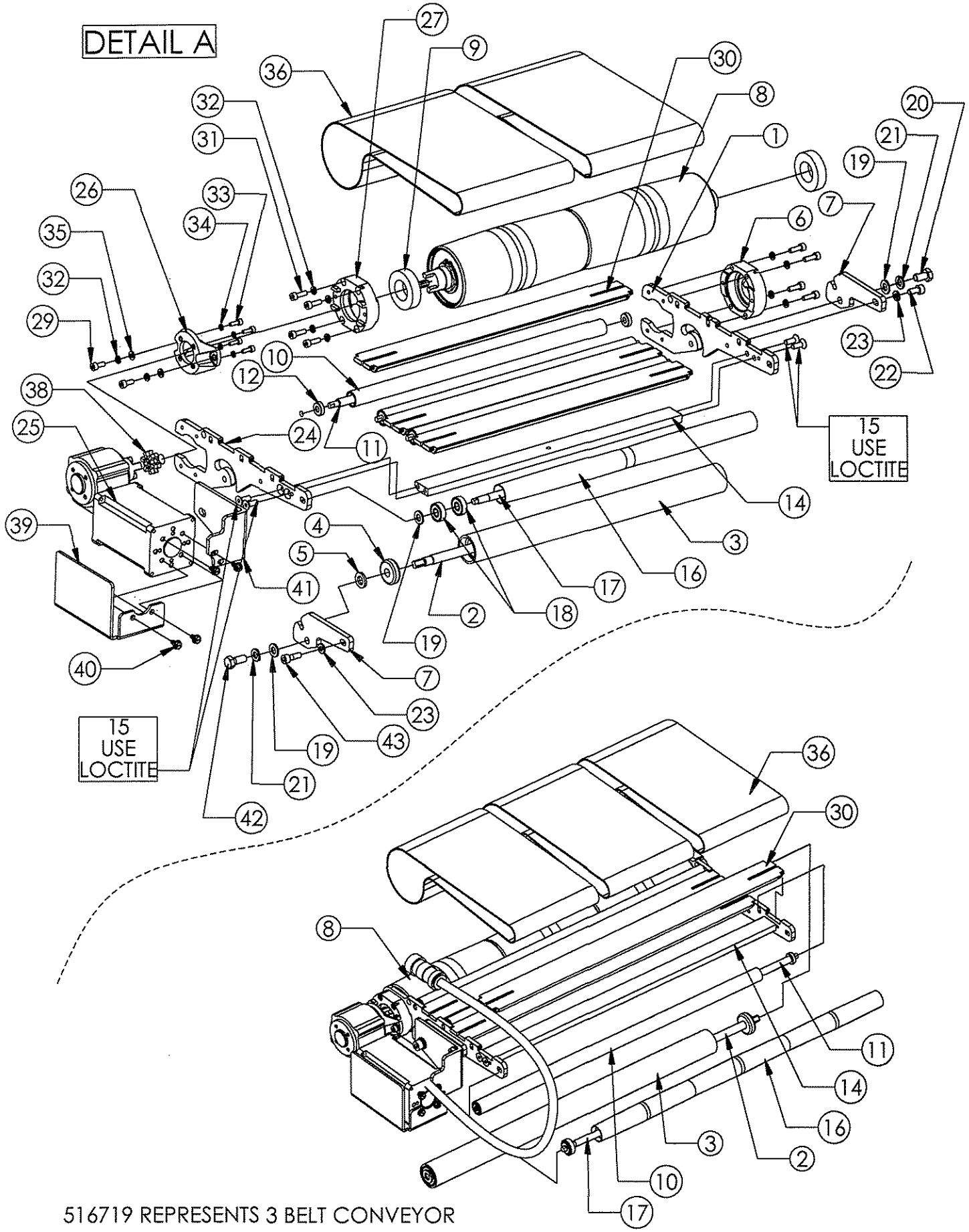

516719 REPRESENTS 3 BELT CONVEYOR

REFLECTOR MOUNTING ASSEMBLY

516720-6

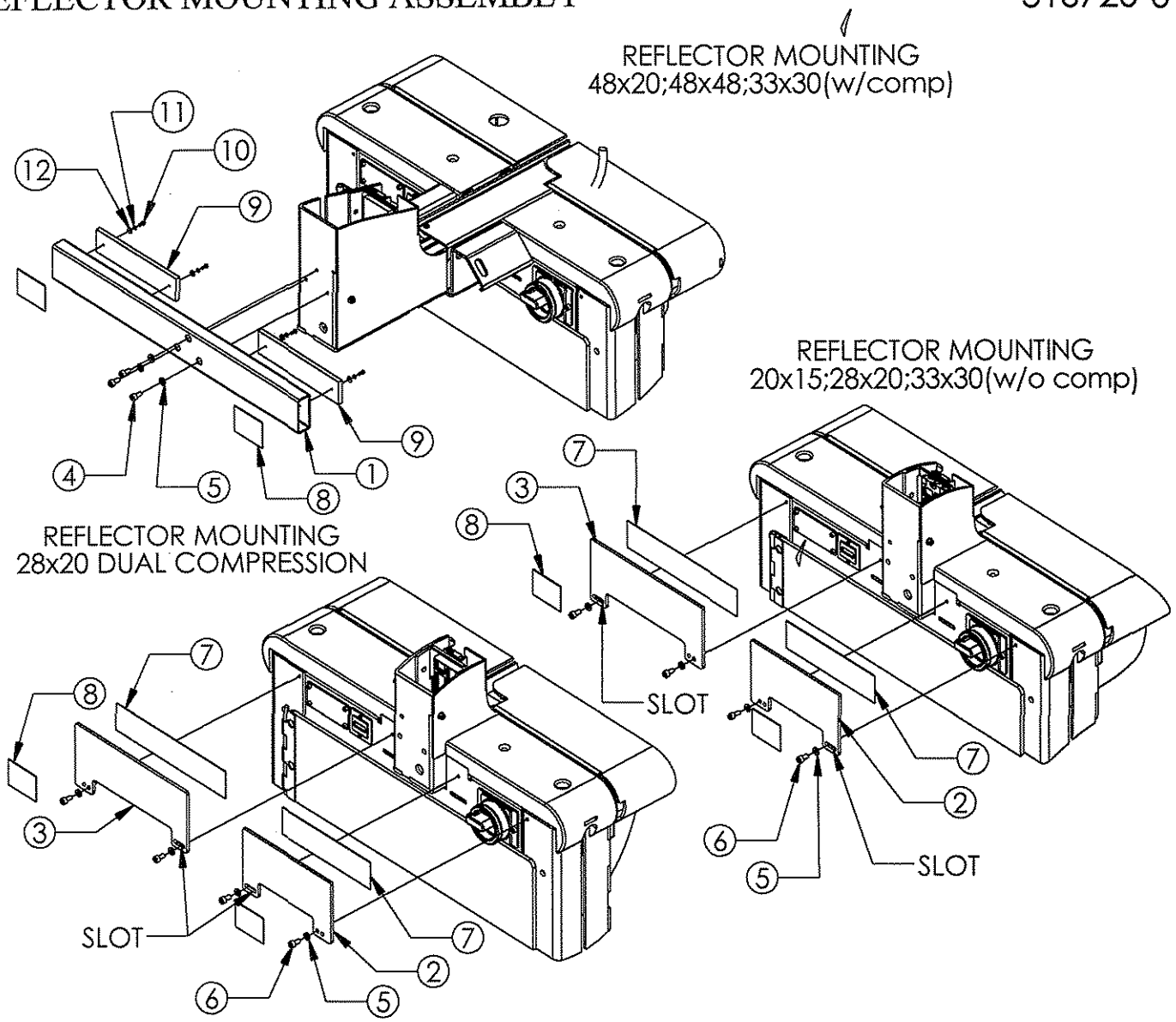

KEY	DESCRIPTION	20"ARCH		28/33"(w/o comp)		28"ARCH CR		48"ARCH	
		516717		516718		516814		516719	
		QTY.	PART #	QTY.	PART #	QTY.	PART #	QTY.	PART #
1	MIRROR BRACKET	N/A	N/A	N/A *	515980	N/A *	515980	1	515980
2	MIRROR BRACKET-ENTRY SIDE	1	515985	1	515985	1	515985	N/A	N/A
3	MIRROR BRACKET-EXIT SIDE	1	515986	1	515986	1	515986	N/A	N/A
4	SCREW SHCS M6x12(WU-ZINC)	N/A	N/A	N/A *	433919	N/A *	433919	3	433919
5	M6 FLAT WASHER (GLV&WU)	4	280850	N/A *	280850	N/A *	280850	3	280850
6	SCREW SBHCS M6x12(WU-ZINC)	4	165366	4	165366	4	165366	N/A	N/A
7	REFLECTIVE TAPE	1.5'	292217	1.5'	292217	1.5'	292217	1.5'	292217
8	LABEL DOMESTIC	2	286298	2	286298	2	286298	2	286298
	LABEL GLOBAL	2	436352	2	436352	2	436352	2	436352
9	REFLECTOR	N/A		N/A *	516175	N/A *	516175	2	516175
10	M3 X 8 SHCS	N/A		N/A *	262551	N/A *	262551	4	262551
11	M3 LOCK WASHER	N/A		N/A *	162568	N/A *	162568	4	162568
12	M3 FLAT WASHER	N/A		N/A *	256901	N/A *	256901	4	256901

* - THESE ITEMS MUST BE USED w/33" COMPRESSION 515980(1);433919(3);280850(3);516175(2);262551(4);162568(4);256901(4)

SECTION-7

PARTS LIST & EXPLODED VIEWS:

- MOUNTING PLATE (7-1)
- SEALER (7-3)
- END GRIP (7-7)
- PLATEN (7-8)
- LOOP GRIP (7-9)
- CAMSHAFT MOTOR (7-10)
- HOT KNIFE (7-11)
- UPPER TRANSITION GUIDE - STD (7-13)
- UPPER TRANSITION GUIDE - ACR (7-15)
- AUTOMATIC CUT-OFF & REFEED (7-17)

⚠WARNING

Inspect all parts daily and replace them if they are worn or broken. Failure to do this can affect a product's operation and could result in serious personal injury.

MOUNTING PLATE ASSEMBLY 514060-8

KEY	QTY	P/N	DESCRIPTION
1	1	515956	MAIN MOUNTING PLATE
2	1	516349	MOTOR - FEED & T/U
3	1	514061	SEALER -- ASSEMBLY
4	1	514349	TENSION MOTOR
5	1	516496	TENSION WHEEL
6	1	514774	FEED AND TAKE-UP WHEEL
7	4	433917	M4 X 16 SHCS (ZINC)
8	1	515955	PROX MOUNTING PLATE
9	1	514748	WHITE SHIELDED PROXMITY SWITCH
10	1	514841	PINCH WHEEL SPACER
11	2	434655	26 OD X 10 ID X 8 WIDE BALL BEARING
12	2	514252	PINCH WHEEL
13	1	010078	M10 LOCKWASHER (ZINC)
14	1	514823	M10 X 50 SBHCS (ZINC)
15	1	436827	M10 X 50 SHCS (ZINC)
16	1	434755	CUTTER BACK PLATE
17	1	420804	DOUBLE EDGED SLITTER
18	1	420803	CUTTER FRONT PLATE
19	12	185700	M4 LOCKWASHER HC (ZINC)
20	2	293903	M4 X 6 SHCS (ZINC)
21	4	010076	M5 LOCKWASHER (ZINC)
22	2	010028	M5 X 12 SHCS (ZINC)
23	6	162383	M4 X 8 SHCS (ZINC)
24	1	251967	M3 X 8 SFHCS
25	2	165317	M4 X 12 SHCS (ZINC)
26	4	481889	M6 LOCKWASHER (ZINC)
27	2	162406	M6 X 40 SHCS (ZINC)
28	1	514593	SQUARING SCREW
29	1	172079	M8 X 40 SHCS (ZINC)
30	2	162381	M8 LW (ZINC)
31	2	164953	M8 HEXNUT (ZINC)

KEY	QTY	P/N	DESCRIPTION
32	3	010051	M8 X 20 SBHCS (ZINC)
33	4	437290	M5 X 12 SFHCS (ZINC)
34	1	011030	M6 X 30 HHCS (ZINC)
35	1	514639	19 OD X 6 ID X 12 WIDE CAM FOLLOWER
36	1	262617	M6 FLAT WASHER (ZINC)
37	1	514822	CAM FOLLOWER PLATE
38	1	005465	M6 HEXNUT (ZINC)
39	1	514840	CAM FOLLOWER SPACER
40	2	514821	10 ID X 16 OD X 1 THICK SHIM WASHER
41	1	437227	M10 FENDER WASHER (ZINC)
42	1	164962	M10 HEXNUT (ZINC)
43	1	514798	TENSION WHEEL PLATE
44	2	434092	22 OD X 8 ID X 7 WIDE BALL BEARING
45	1	514842	Ø1/4 X 1 LG W/8-32 THD. PULL-OUT DOWEL
46	1	514807	5/16 OD X 1/4 ID X 1/2 LG BRONZE BUSHING
47	1	514799	HIGH TENSION SPRING SHAFT
48	1	438628	1/2 OD X 3/8 ID X 3 LG EXTENSION SPRING
49	1	009392	#8 FLAT WASHER (ZINC)
50	1	514797	HIGH TENSION BRACE
51	1	421723	#8 LOCKWASHER (ZINC)
52	1	014546	#8-32 X 1/4 LG SHCS (ZINC)
53	1	514763	TENSION YOKE
54	1	516497	3/4 OD X 3/8 ID X 3 LG DIE SPRING **(PURPLE)**
55	1	421876	M6 FENDER WASHER (ZINC)
56	1	162374	M6 X 30 SHCS (ZINC)
57	1	420676	Ø6-M5 X 25 SHSS
58	1	514806	TENSION YOKE SPACER
59	1	171571	M5 FLAT WASHER (ZINC)
60	1	169440	M5 HEXNUT (ZINC)
61	1	514820	8ID X 14OD X 1mm THICK SHIM WASHER
62	1	514969	5/8" X 3/8" X 17mm LG. SPACER
63	A/R	514598	SPACER
64	1	514594	SQUARING SPACER
65	A/R	516495	WHEEL SPACER

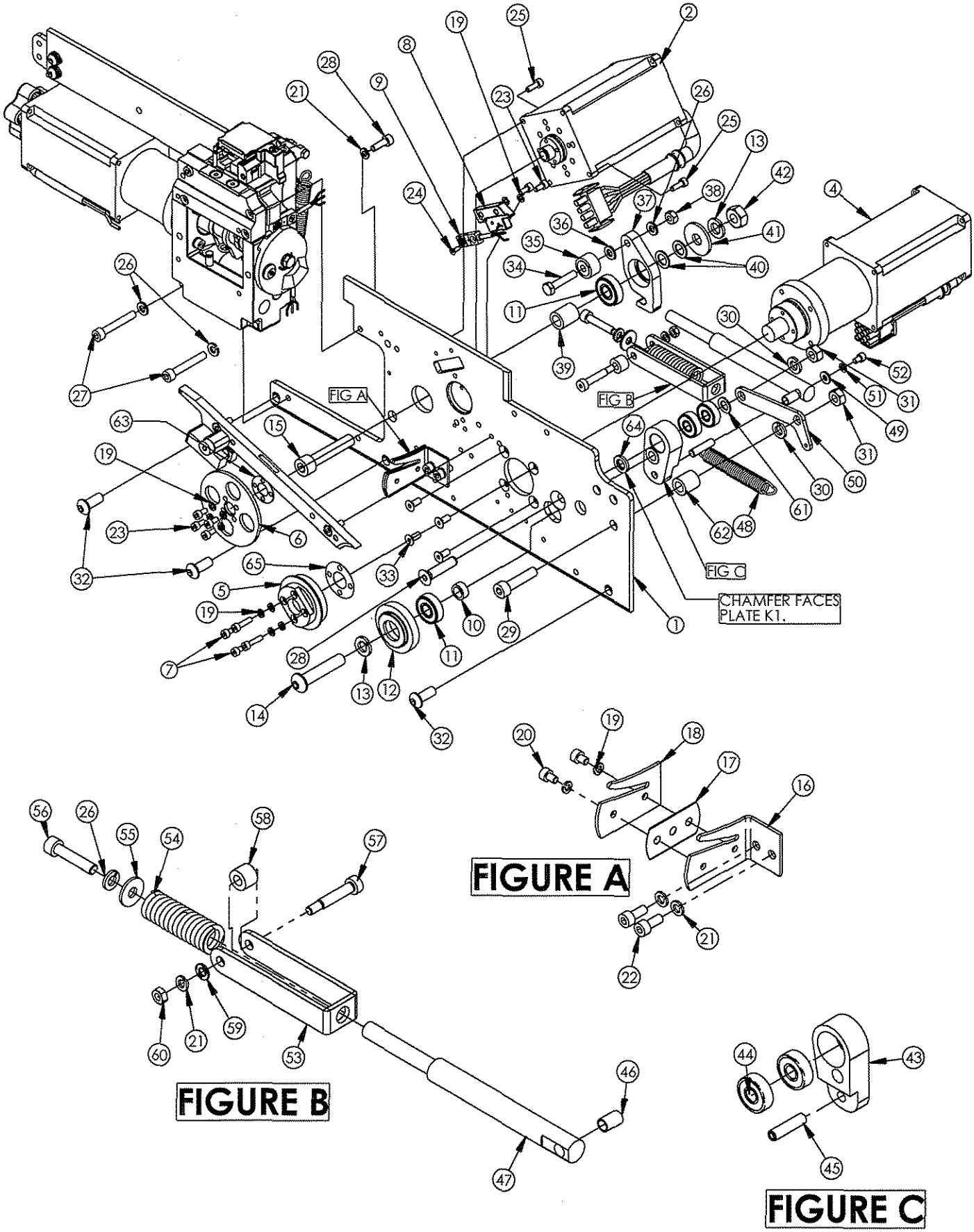
FIG A
FIG B
FIG C
CHAMFER FACES
PLATE K1.
FIGURE A
FIGURE B
FIGURE C

KEY	QTY	P/N	DESCRIPTION
1	1	514616	SEALER HOUSING
2	1	514062	SEALER -- CAM SHAFT MOTOR ASSEMBLY
3	1	514080	SEALER -- END GRIP ASSEMBLY
4	1	514702	SEALER -- PLATEN ASSEMBLY
5	1	514728	SEALER -- LOOP GRIP ASSEMBLY
6	1	514622	SLIDE COVER
7	1	514637	SPRING COVER
8	1	514630	R.H.STRIPPER
9	1	514638	SHAFT - PIVOT
10	1	519117	LEFT LOOP STRIPPER
11	1	514708	FLS PROX MOUNT
12	3	514747	PROXIMITY SWITCH
13	1	514664	HOT KNIFE SUB ASSEMBLY
14	3	514674	COMPRESSION SPRING
15	1	434688	GROOVED PIN
16	2	433917	M4 X 16 SHCS (ZINC)
17	4	421652	M5 X 30 SHCS (ZINC)
18	4	010076	M5 LOCKWASHER (ZINC)
19	1	514691	ANVIL STOP
20	1	280280	M5 X 10 SFHCS (ZINC)
21	1	434284	M4 X 30 SHCS
22	4	011214	M5 X 16 SHCS (ZINC)
23	3	251967	M3 X 8 SFHCS
24	2	185700	M4 LOCKWASHER HC (ZINC)
25	2	432258	M4 X 25 SHCS
26	2	437290	M5 X 12 SFHCS (ZINC)
27	1	438628	EXTENSION SPRING
28	1	519157	LEFT LOOP STRIPPER BACK-UP PLATE
29	2	262217	M6 FLAT WASHER (ZINC)
30	2	481889	M6 LOCKWASHER (ZINC)
31	2	165366	M6 X 12 BHCS (ZINC)

Wearing parts are those
items which are underlined.

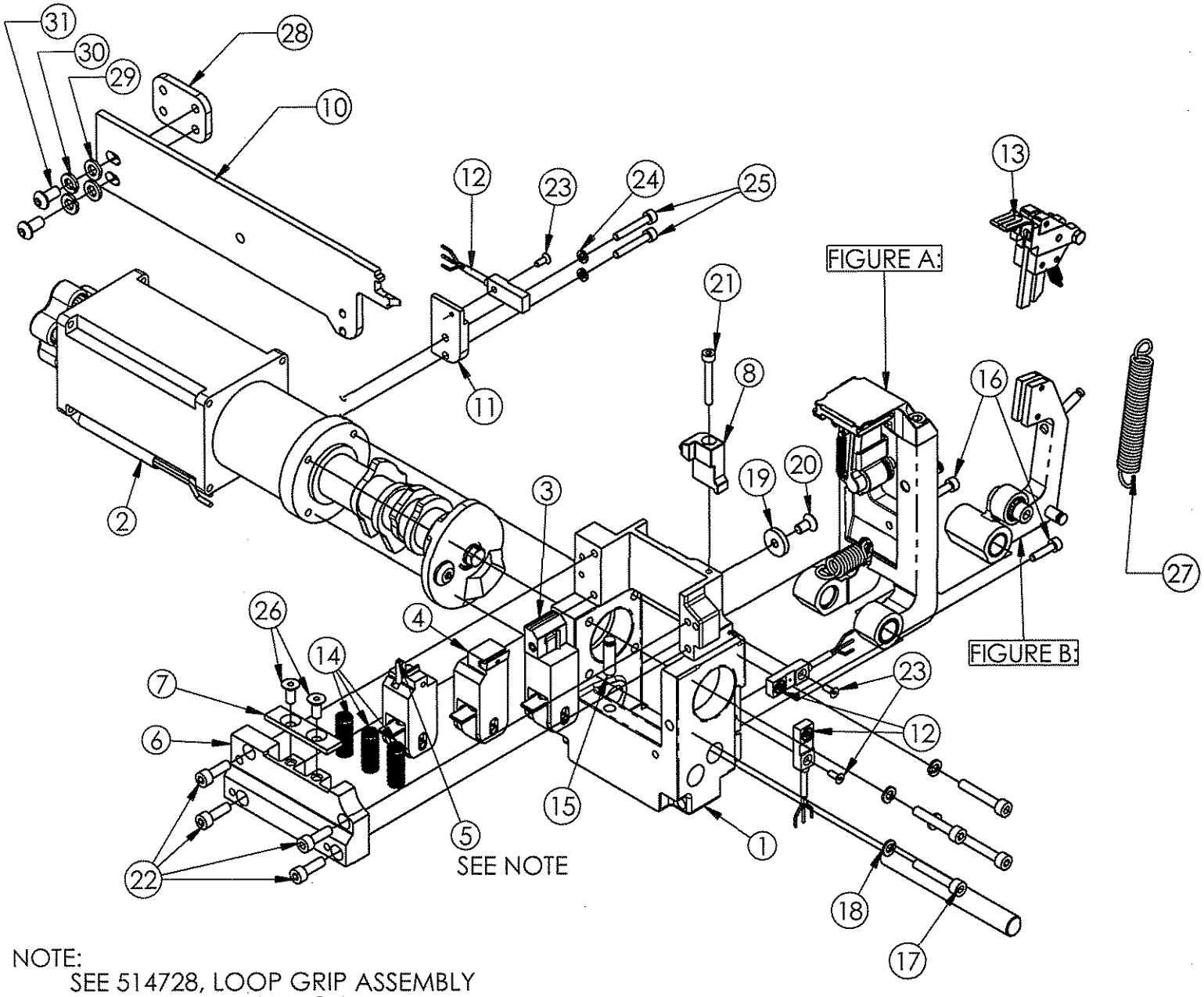

NOTE:
SEE 514728, LOOP GRIP ASSEMBLY
FOR SPECIAL INSTRUCTIONS WHEN
USED ON LBX6520 CORREGATED STRAPPING
MACHINES

1	1	514628	ANVIL PIVOT MACHINING
2	2	514684	DU BUSHING
3	1	514667	FLANGED BUSHING
4	1	514626	ANVIL
5	1	514744	FEED LIMIT LEVER
6	1	439096	1/4 X 3/4" GROOVE PIN
7	1	514670	GROOVED PIN TYPE G
8	1	514668	GROOVED PIN
9	1	434657	EXTENSION SPRING
10	2	254411	M6 X 14 SHCS
11	1	171570	M4 FLATWASHER (ZINC)
12	1	185700	M4 LOCKWASHER HC (ZINC)
13	1	165317	M4 X 12 SHCS
14	1	514656	EXTENSION SPRING
15	1	514691	ANVIL STOP
16	1	280280	M5 X 10 SFHCS
17	1	514599	ARM LIMITER

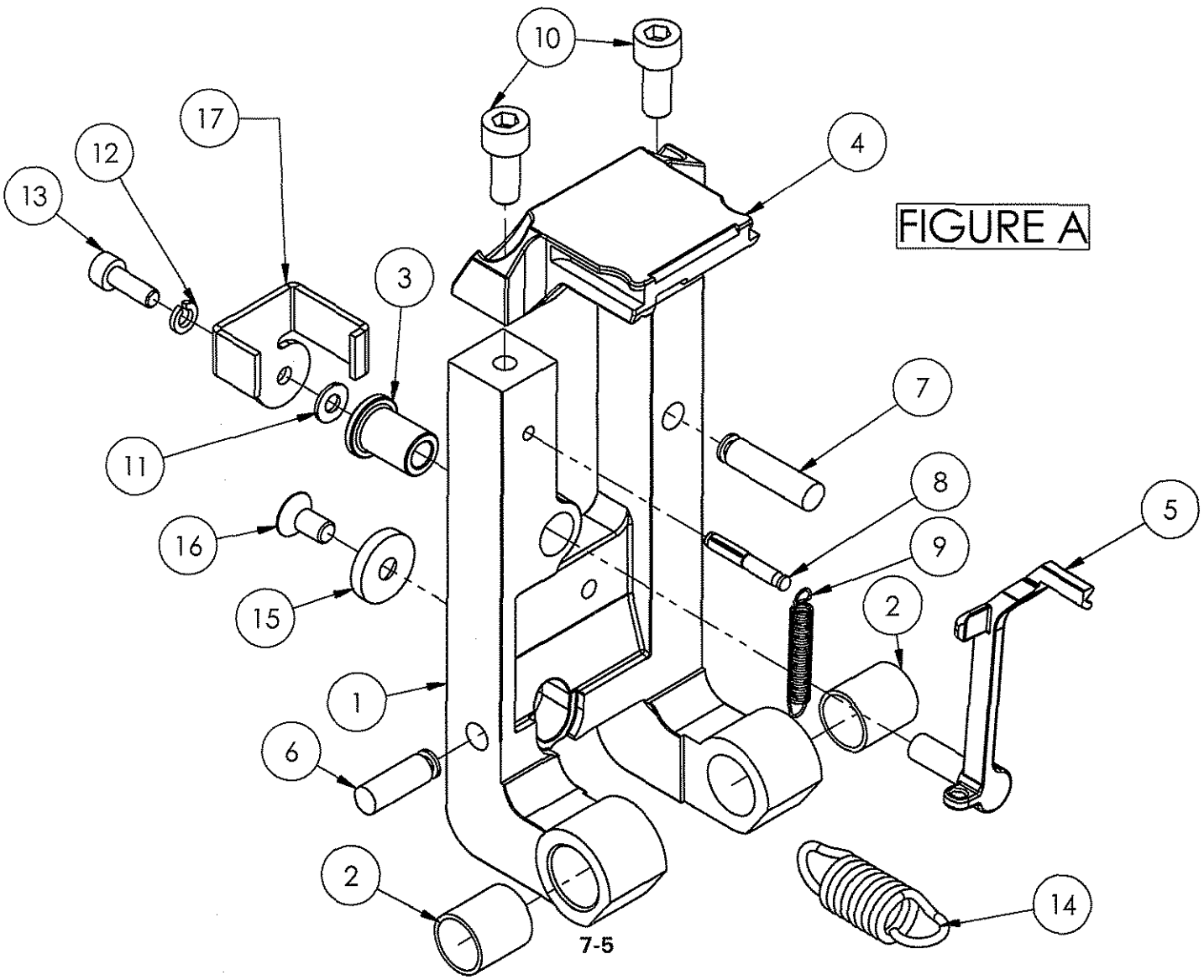

KEY	QTY.	P/N	DESCRIPTION
1	1	514666	HOT KNIFE PIVOT MACH.
2	1	514639	CAM FOLLOWER
3	1	481889	M6 LOCKWASHER (ZINC)
4	1	10035	M6 X 18 SHCS
5	2	514684	DU BUSHING
6	1	434688	GROOVED PIN
7	1	264453	GROOVE PIN, 3/16-1 1/4 LG.
8	2	514688	Ø3 X 12 ROLL PIN

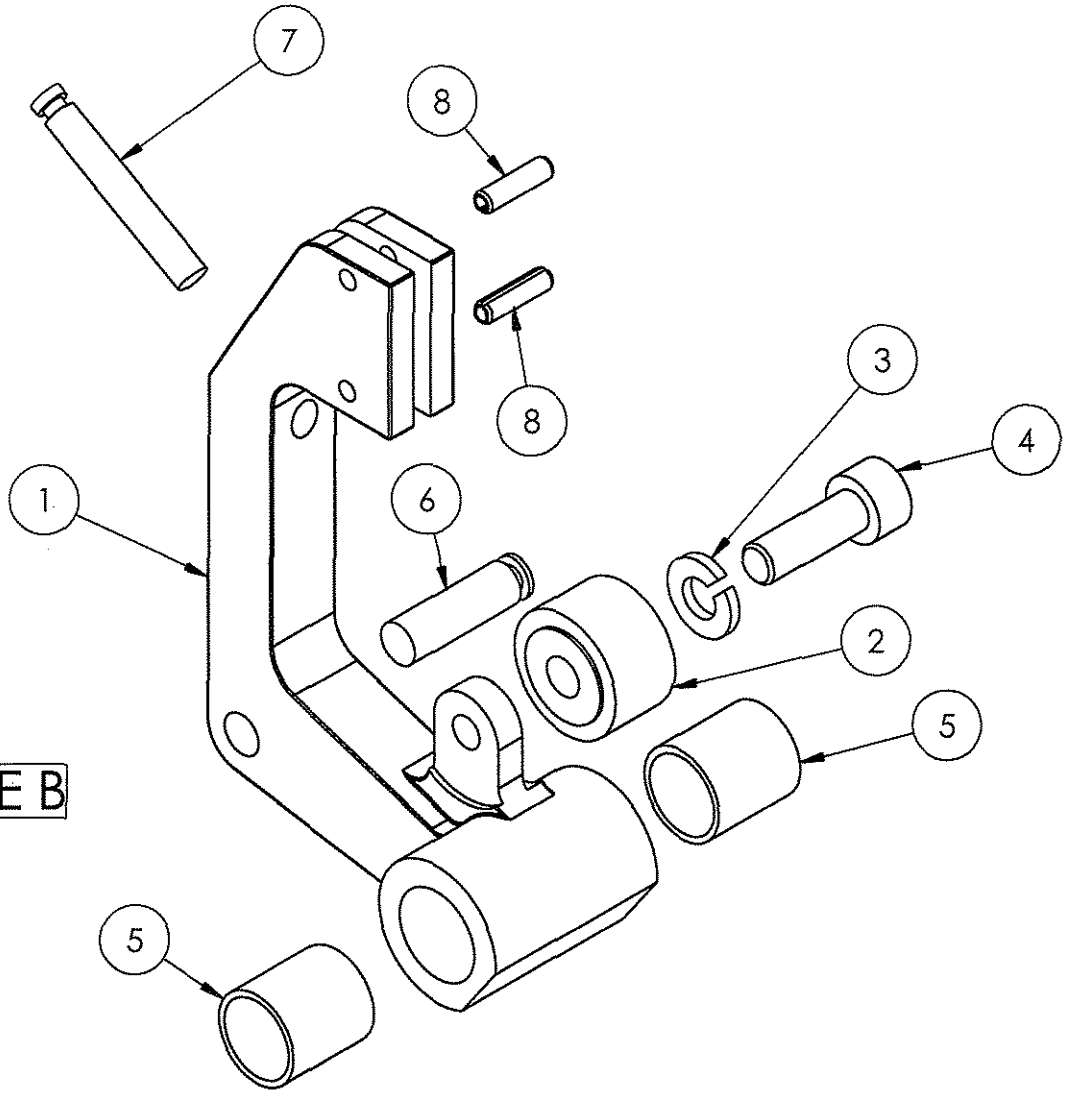

FIGURE B

END GRIP ASSEMBLY 514080-2

KEY	QTY.	P/N	DESCRIPTION
1	1	514079	END GRIP BASE
2	1	514545	EDGE GUIDE
3	1	514620	SPRING SEAT
4	1	514639	CAM FOLLOWER
5	1	514692	ROLL PIN H.D. 6X20
6	2	434792	DIE SPRING LHL-375D-1
7	1	434255	Ø4 X 22 ROLL PIN
8	1	514609	FULL WIDTH END-GRIP CUTTER

Wearing parts arethose items which are underlined.

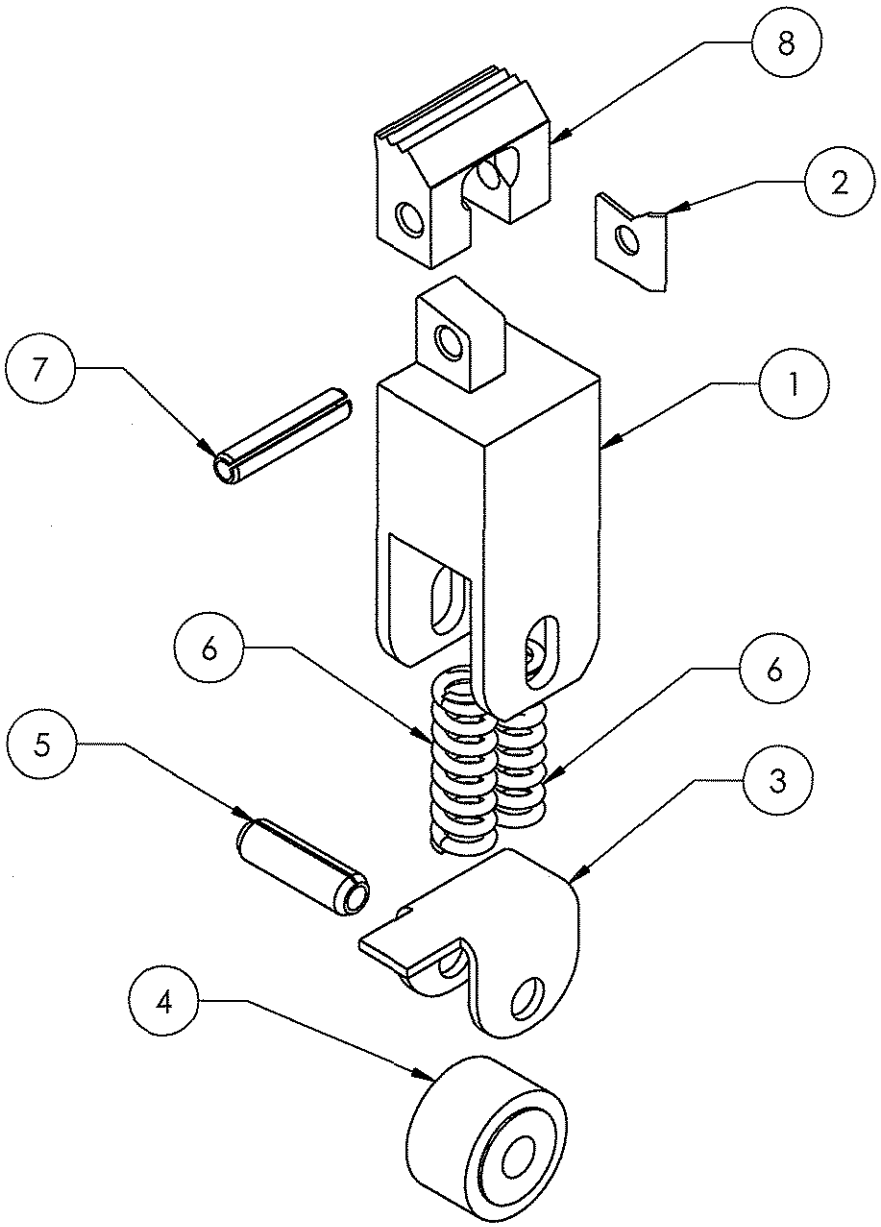

PLATEN ASSEMBLY

514702-2

KEY	QTY.	P/N	DESCRIPTION
1	1	514618	PLATEN
2	1	514620	SPRING SEAT
3	1	514639	CAM FOLLOWER
4	1	434792	DIE SPRING LHL-375D-1
5	1	439145	DIE SPRING, DANLY 9-1004-36
6	1	514692	ROLL PIN H.D. 6X20
7	1	514635	CUTTER
8	1	514636	CUTTER SCREW
9	2	514679	COMPRESSION SPRING

Wearing parts are those items which are underlined.

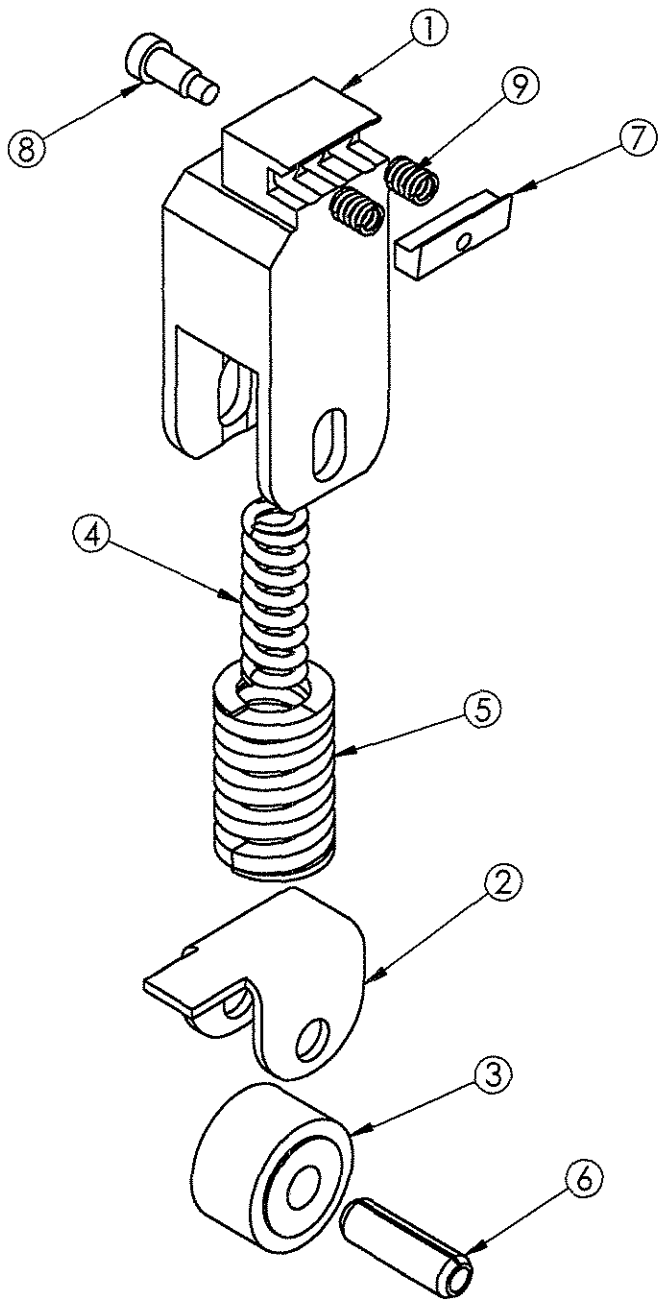

LOOP GRIP ASSEMBLY 514728-2

KEY	QTY.	P/N	DESCRIPTION
1	1	514737	S/A LOOP GRIP (108)
2	1	514620	SPRING SEAT
3	1	514639	CAM FOLLOWER
4	2	434792	DIE SPRING LHL-375D-1
5	1	514692	ROLL PIN H.D. 6X20
6	1	514738	L-G STRAP ALIGN FINGER
7	1	432311	Ø3 X 18 ROLL PIN

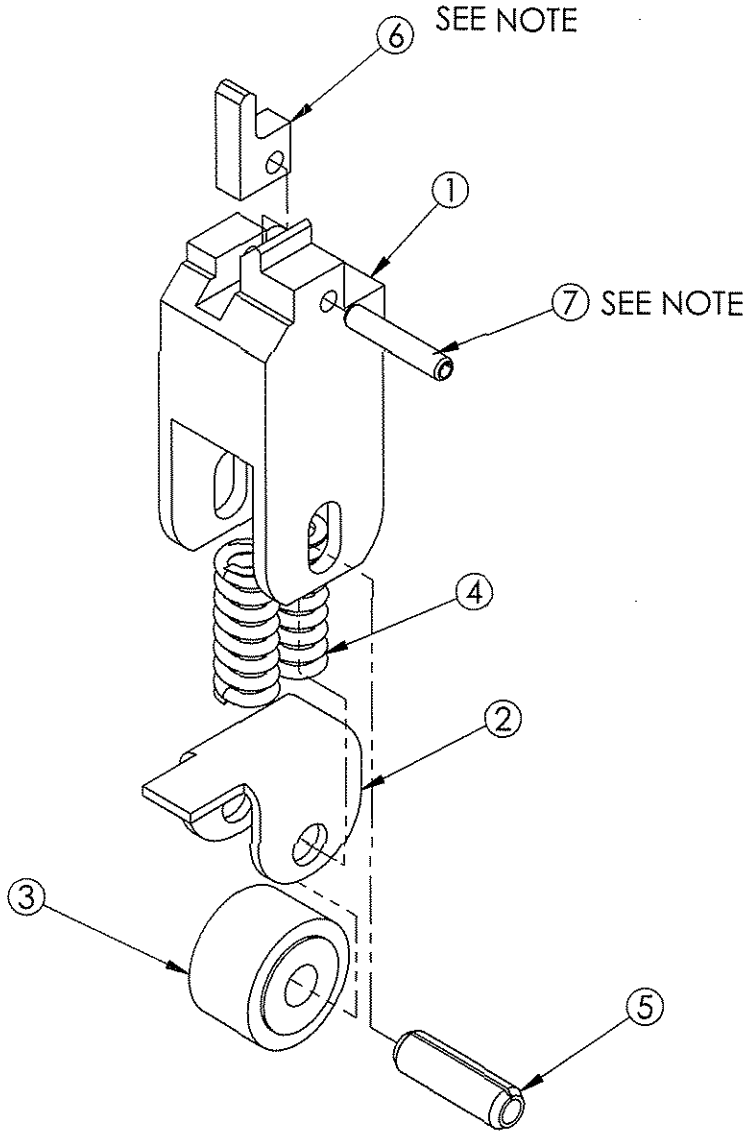

NOTE:
REMOVE KEY 6 & 7 WHEN USED ON LBX6520
CORREGATED STRAPPING MACHINE

CAM SHAFT MOTOR ASSEMBLY

514062-4

KEY	QTY	P/N	DESCRIPTION
1	1	514611	MOTOR - CAMSHAFT
2	1	514677	5 X 5 X 62 KEY
3	1	514647	LEAD CAM SPACER
4	1	514731	CAM # 1 (LOOP GRIP)
5	1	514645	CAM SPACER (14.0)
6	1	514732	CAM # 2 (PLATEN)
7	2	514644	CAM SPACER (8.0)
8	1	680593	CAM # 3 (HOT KNIFE)
9	1	680594	CAM # 4 (END GRIP)
10	1	514646	END SPACER,CAM
11	1	519203	MAIN CAM
12	1	264313	BALL BEARING (32 X 15 X 9)
13	1	481889	M6 LOCKWASHER (ZINC)
14	1	173028	M6 X 16 HHCS
15	1	514341	KNOB (MOTOR)

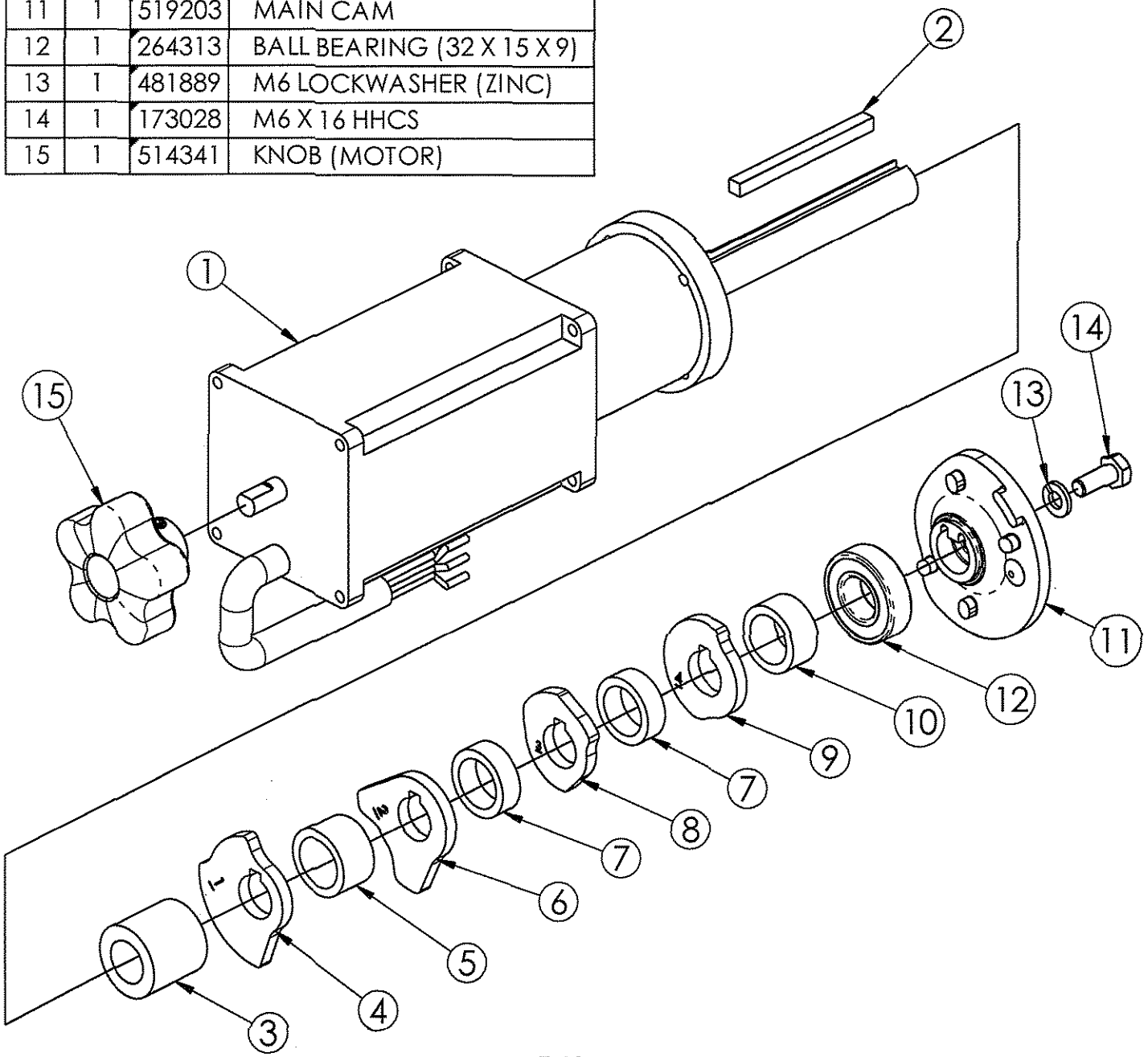

HOT KNIFE ASSEMBLY

514664-4

KEY	QTY.	P/N	DESCRIPTION
1	1	514654	TERMINAL BLOCK
2	1	514650	HOT KNIFE WELDMENT
3	1	514655	PLASTIC SHOULDER WASHER
4	1	514653	KNIFE FULCRUM
5	3	514718	3 X 16 HEAVY DUTY SPRING TENSION PIN
6	1	171570	M4 FLATWASHER (ZINC)
7	1	185700	M4 LOCKWASHER HC (ZINC)
8	1	514662	M4 X 20 HHCS (ZINC)
9	2	434665	M4 INT. LOCKWASHER (ZINC)
10	2	514663	M4 X 8 HHCS
11	1	514658	EXTENSION SPRING

Wearing parts are those items which are underlined.

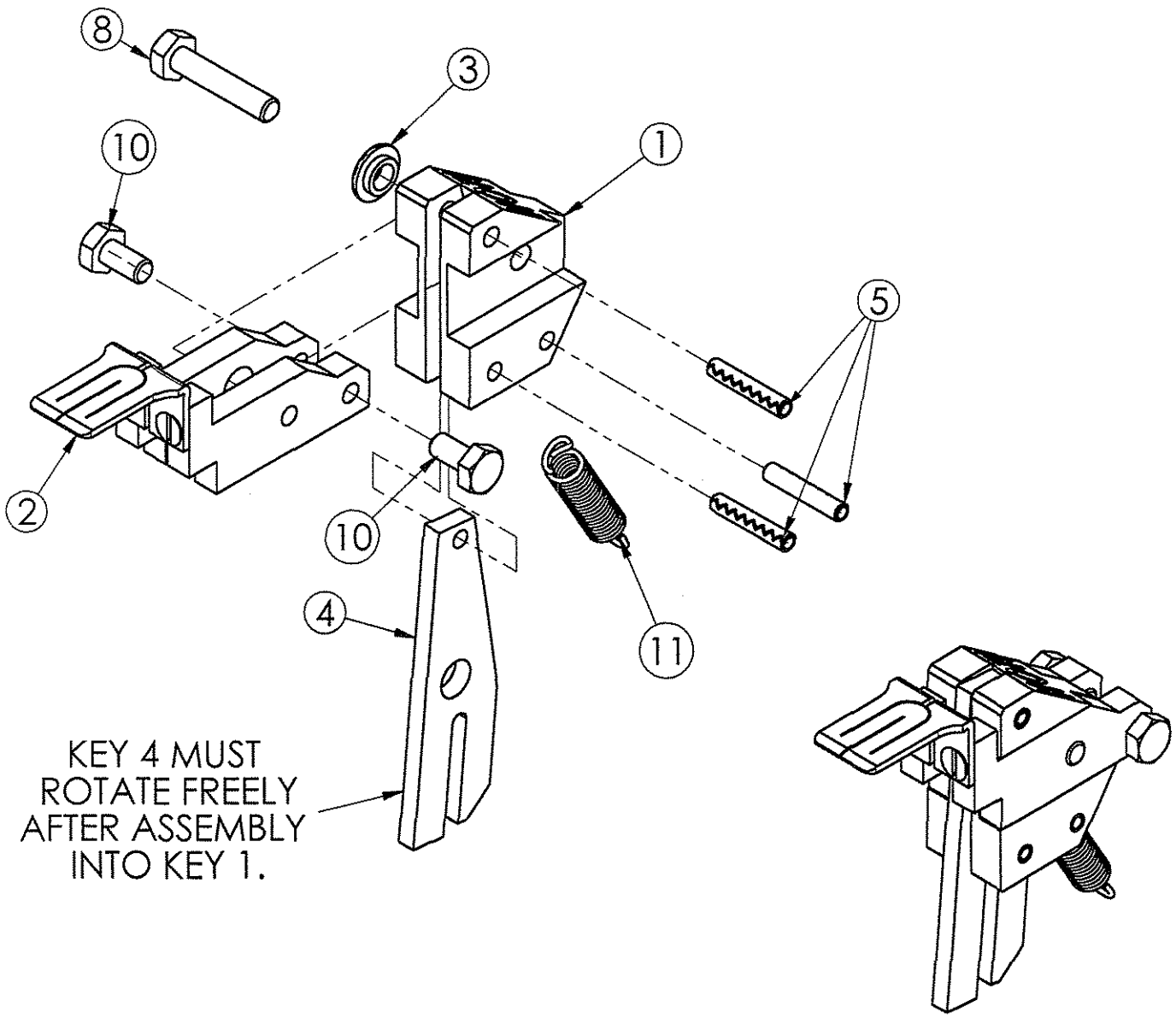

BLANK

UPPER TRANSITION GUIDE ASSEMBLY

515962-7

KEY	QTY	P/N	DESCRIPTION
1	REF	516350	TRACK COVER (MACHINING)
	REF	516351	TRACK COVER (MACHINING) (108 ONLY)
2	1	172079	M8 X 40 SHCS
3	1	514700	TRACK COVER SLEEVE
4	1	514864	DETENT
5	1	514783	BACK-UP ARM PIVOT PIN
6	2	278155	M4 X 10 SFHCS (ZINC)
7	REF	515415	GUIDE OPENER HANDLE
	REF	516060	GUIDE OPENER HANDLE (65X20 ONLY)
8	2	172945	M8 X 16 HHCS
9	REF	513175	VINYL GRIP (FITS 1" X 1/4" STK)
10	3	162381	M8 LOCKWASHER (ZINC)
11	REF	SEE STRAP GUIDE KIT	FEED & TAKE-UP PINCH WHEEL
12	1	514693	BALL BEARING 16X4X5
13	2	514694	M4 X 10 SPEC LOW HEAD SHCS
14	1	514964	STRAP GUIDE
15	1	434774	COMPRESSION SPRING
16	1	514791	3 X 12 TAPER GROOVED DOWEL PIN
17	1	514770	ACR SPLIT GUIDE LEFT
18	3	432262	5 X 12 DOWEL PIN
19	3	010028	M5 X 12 SHCS (ZINC)
20	1	164956	8/M6 X 12 SHSS
21	1	514865	DETENT
22	1	514868	LC-051-13MW (C-SPRING)
23	REF	515956	MAIN MOUNTING PLATE
24	2	187415	M5 LOCK WASHER HC
25	2	171571	M5 FLAT WASHER
26	1	515284	ACR HEAD MOUNT PLATE PLUG
27	1	514717	WAVE WASHER
28	REF	SEE STRAP GUIDE KIT	CUTTER TONGUE
29	1	434136	DOWEL PIN 2.5 X 10
30	1	164953	M8 HEX NUT (ZINC)
31	1	420322	M8 FENDER WASHER DIN9021(ZINC)
32	1	514866	SPRING RETAINER
33	1	514867	DETENT BALL
34	1	514897	STUB BACK-UP ARM
35	REF	SEE STRAP GUIDE KIT	FEED & TAKE-UP OUTER SPRING
36	REF	SEE STRAP GUIDE KIT	FEED & TAKE-UP INNER SPRING

UPPER TRANSITION GUIDE ASSEMBLY

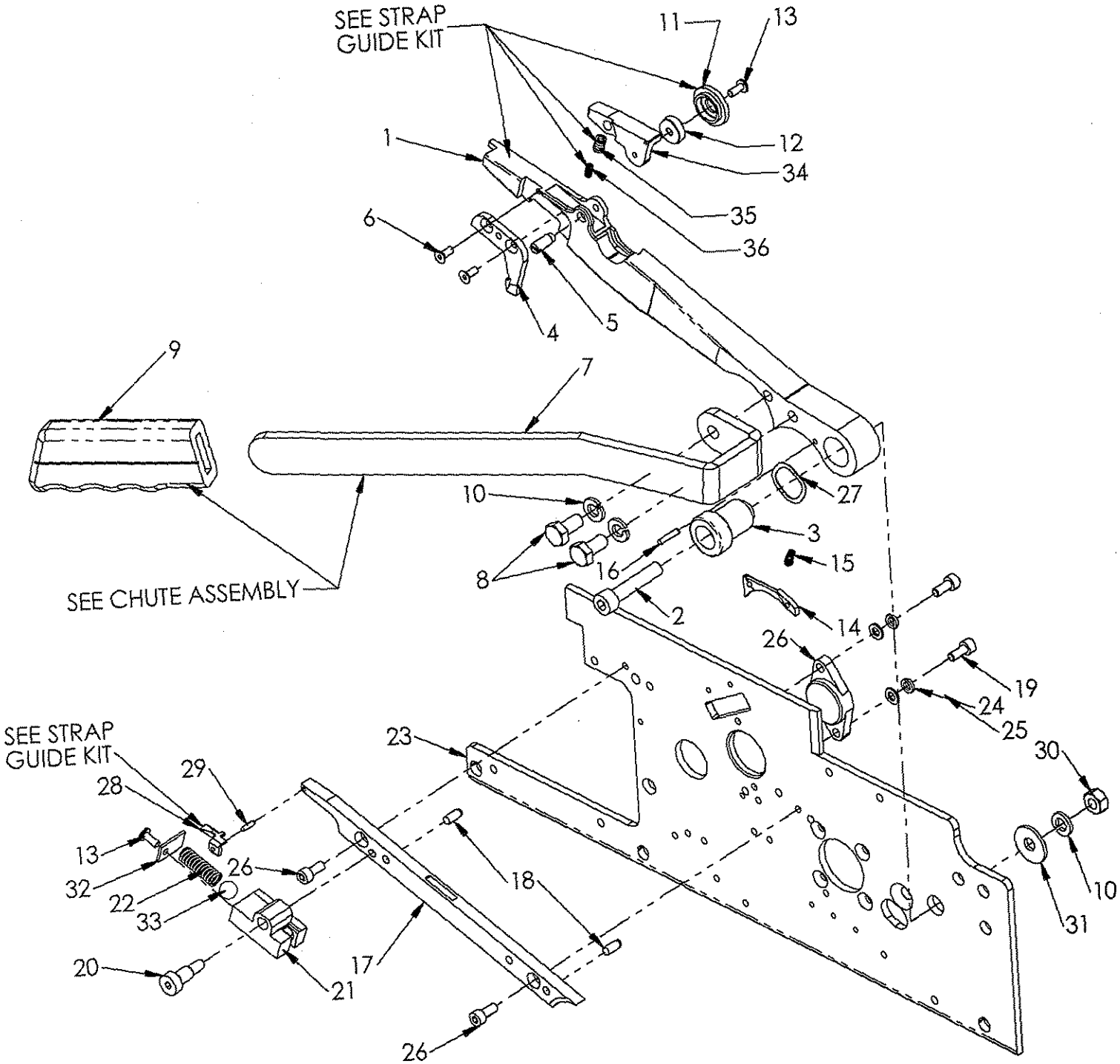

UPPER TRANSITION GUIDE ASSEMBLY - ACR 515963-9

KEY	QTY	P/N	DESCRIPTION
1	REF	516352	TRACK COVER (MACHINING)
	REF	516353	TRACK COVER (MACHINING) (108W ONLY)
2	1	172079	M8 X 40 SHCS
3	1	514700	TRACK COVER SLEEVE
4	1	514864	DETENT
5	1	514783	BACK-UP ARM PIVOT PIN
6	2	278155	M4 X 10 SFHCS (ZINC)
7	REF	515415	GUIDE OPENER HANDLE
	REF	516060	GUIDE OPENER HANDLE (65X20 ONLY)
8	2	172945	M8 X 16 HHCS
9	REF	513175	VINYL GRIP (FITS 1" X 1/4" STK)
10	3	162381	M8 LOCKWASHER (ZINC)
11	REF	SEE STRAP GUIDE KIT	FEED & TAKE-UP PINCH WHEEL
12	1	514693	BALL BEARING 16X4X5
13	2	514694	M4 X 10 SPEC LOW HEAD SHCS
14	1	514964	STRAP GUIDE
15	1	434774	COMPRESSION SPRING
16	1	514791	3 X 12 TAPER GROOVED DOWEL PIN
17	1	515952	ACR SPLIT GUIDE LEFT
18	3	432262	5 X 12 DOWEL PIN
19	3	010028	M5 X 12 SHCS (ZINC)
20	1	164956	8/M6 X 12 SHSS
21	1	514865	DETENT
22	1	514868	LC-051-13MW (C-SPRING)
23	REF	515956	MAIN MOUNTING PLATE
24	1	433932	M5 X 40 SHCS
25	2	010076	M5 HC LOCK WASHER
26	1	514717	WAVE WASHER
27	1	515285	GUIDE RING
28	1	515951	ACR SPLIT GUIDE RIGHT
29	1	164953	M8 HEX NUT (ZINC)
30	1	420322	M8 FENDER WASHER DIN 9021 (ZINC)
31	1	514866	SPRING RETAINER
32	REF	SEE STRAP GUIDE KIT	CUTTER TONGUE
33	1	434136	DOWEL PIN 2.5 X 10
34	1	515295	ACR BRIDGE
35	1	515296	2x10 DOWEL PIN
36	1	514867	DETENT BALL
37	1	514897	STUP BACK-UP ARM
38	REF	SEE STRAP GUIDE KIT	FEED & TAKE-UP OUTER SPRING
39	REF	SEE STRAP GUIDE KIT	FEED & TAKE-UP INNER SPRING

UPPER TRANSITION GUIDE ASSEMBLY - ACR

515963-9

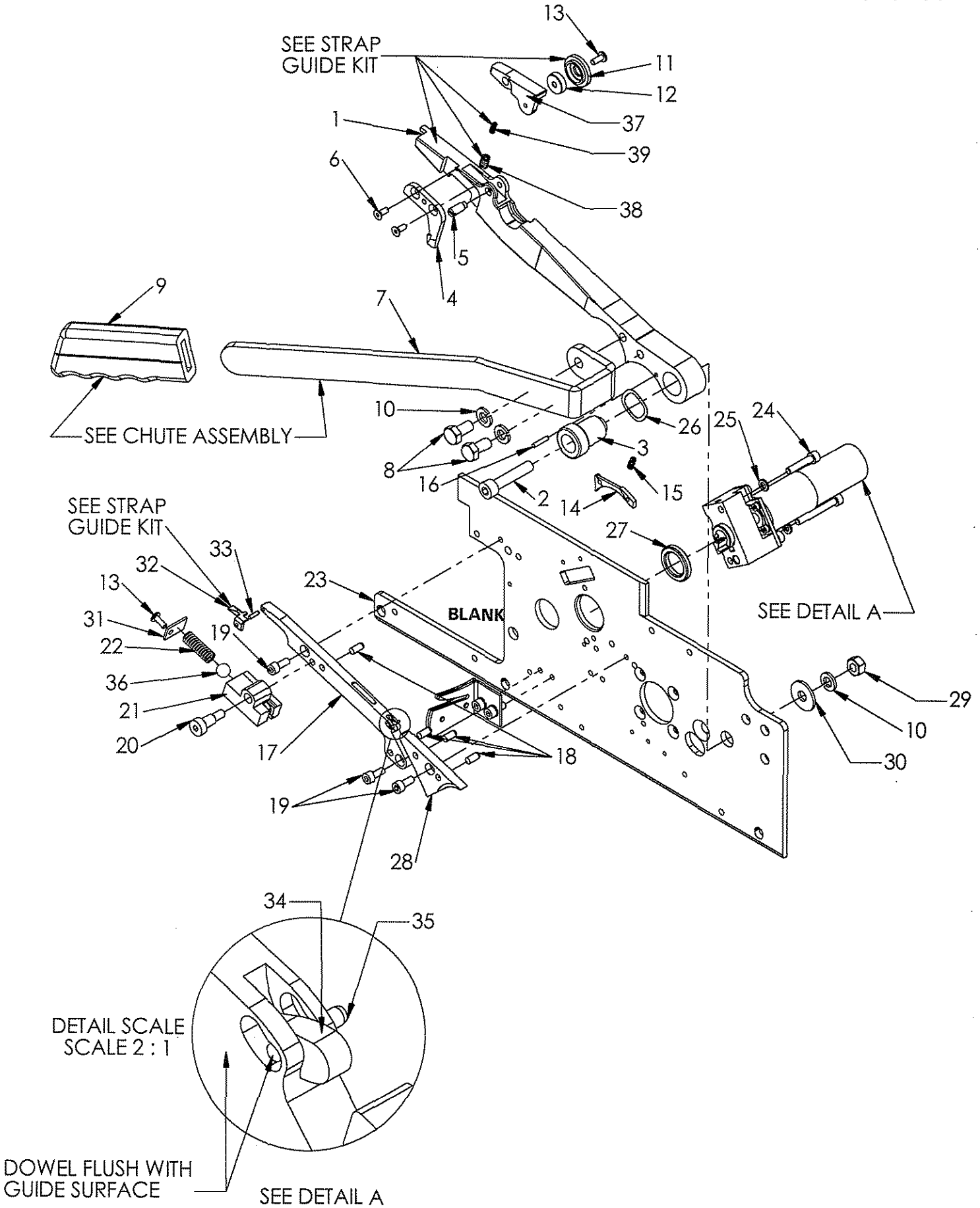

AUTOMATIC CUT-OFF & REFEED ASSEMBLY (ACR)

KEY	QTY.	P/N	DESCRIPTION
1	1	515278	ACR HOUSING
2	1	515954	ACR CUTTER SLEEVE
3	1	515294	ACR CUTTER
4	1	434776	DETENT BALL, ACR
5	1	434777	COMPRESSION SPRING
6	1	434738	5 X 10 KEY
7	1	515276	ACR MOTOR
8	1	515277	ACR MOTOR PLATE
9	1	515283	Ø3 X 20 GROOVE PIN
10	4	162568	M3 LOCKWASHER (ZINC)
11	4	262551	M3 X 8 SHCS (ZINC)
12	2	010076	M5 LOCKWASHER (ZINC)
13	REF.	433932	M5 X 40 SHCS (ZINC)
14	2	010028	M5 X 12 SHCS (ZINC)
15	1	420390	M6 X 12 SOCKET HEAD SS
16	3	434500	ACR RELAY
17	REF.	515296	2x10 DOWEL PIN
18	REF.	515292	ACR SPLIT GUIDE LEFT
19	REF.	515295	ACR BRIDGE
20	REF.	010031	M5 X 25 SHCS

AUTOMATIC CUT-OFF & REFEED ASSEMBLY (ACR)

515963

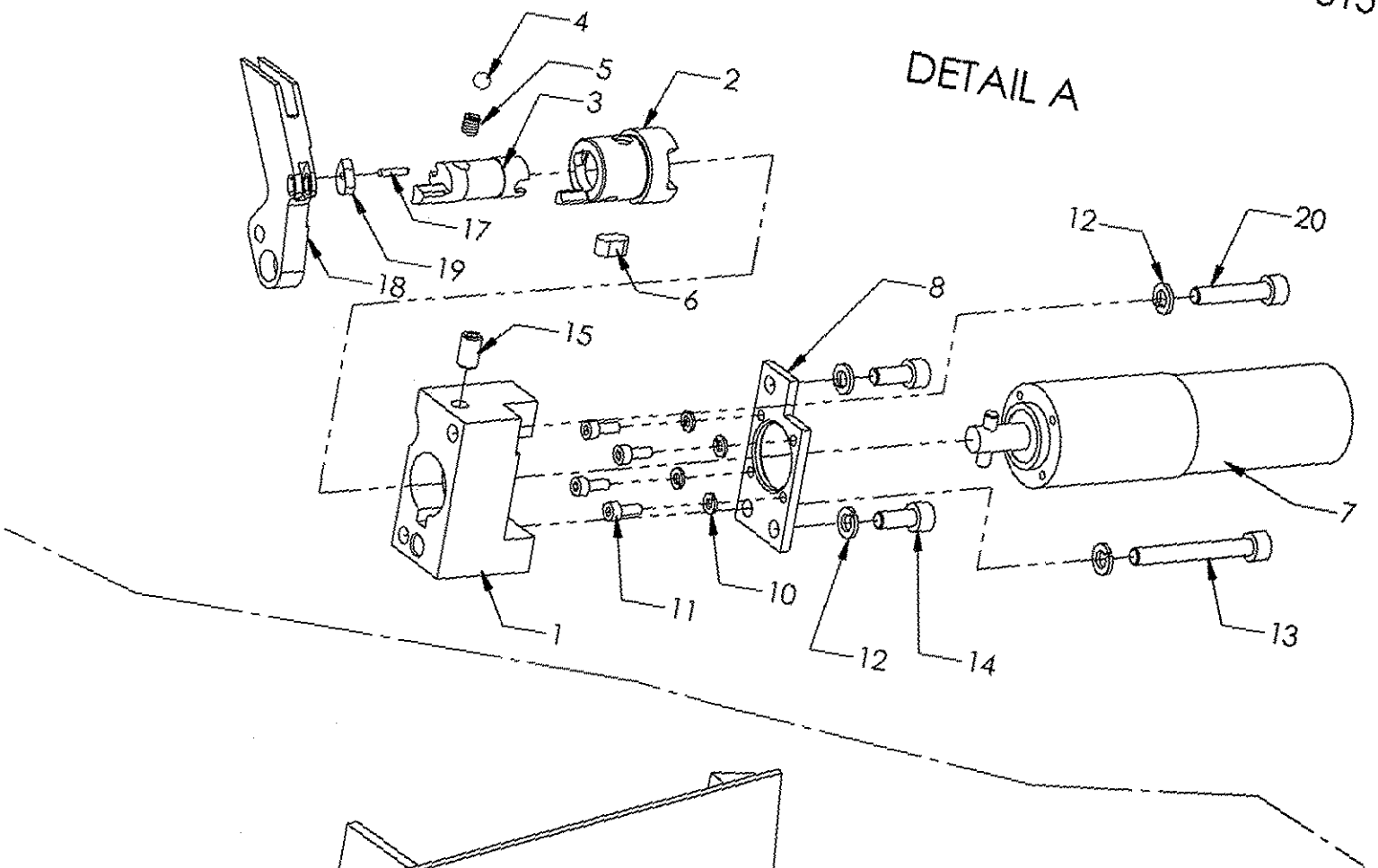

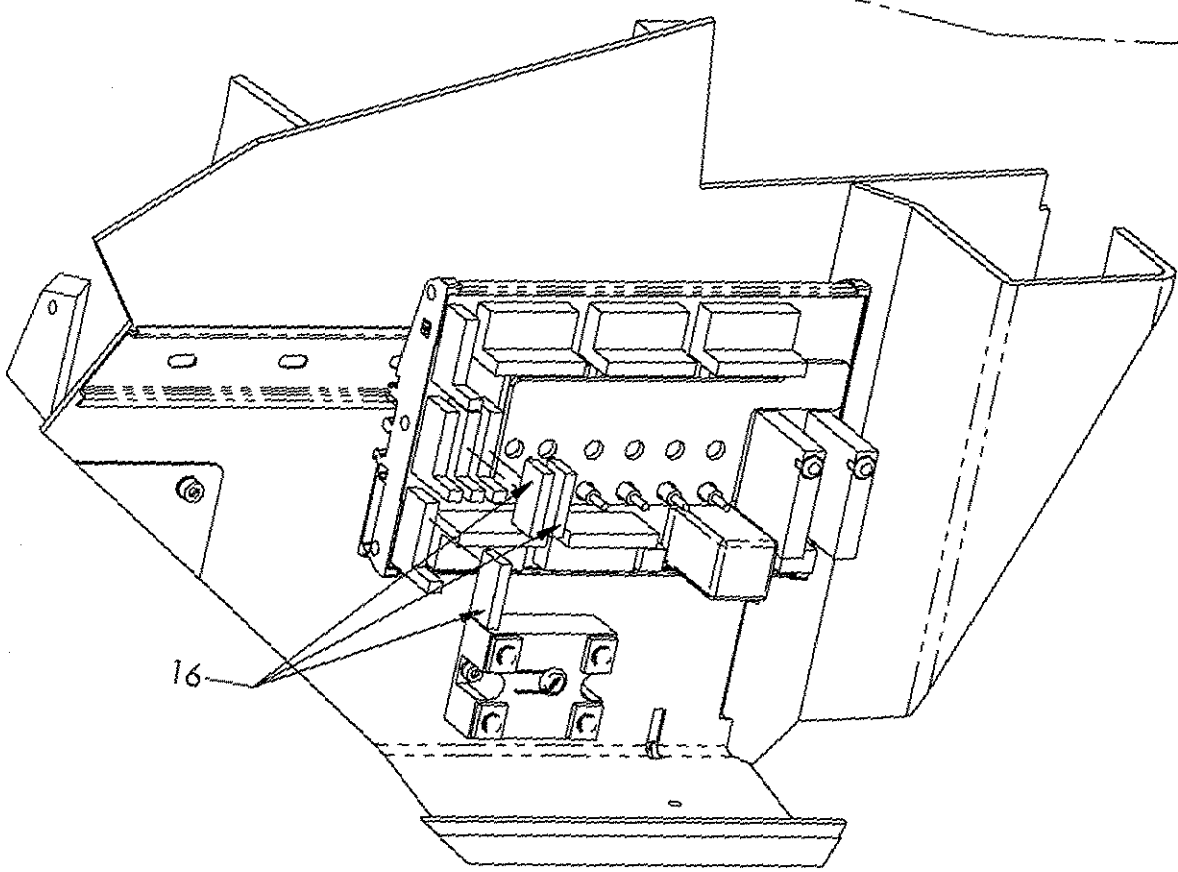

ACR TUBE ASSEMBLY

515963-9

ITEM NO	QTY.	PART NO.	DESCRIPTION
1	REF	515460	DISPENSER DOOR WELDMENT
2	REF	515971	SLACK BOX WELDMENT
3	1	516211	ACR DEFLECTOR WELDMENT
4	1	280279	M5 X 16 SFHCS
5	1	434664	M5 HEX NUT W/ WASHER

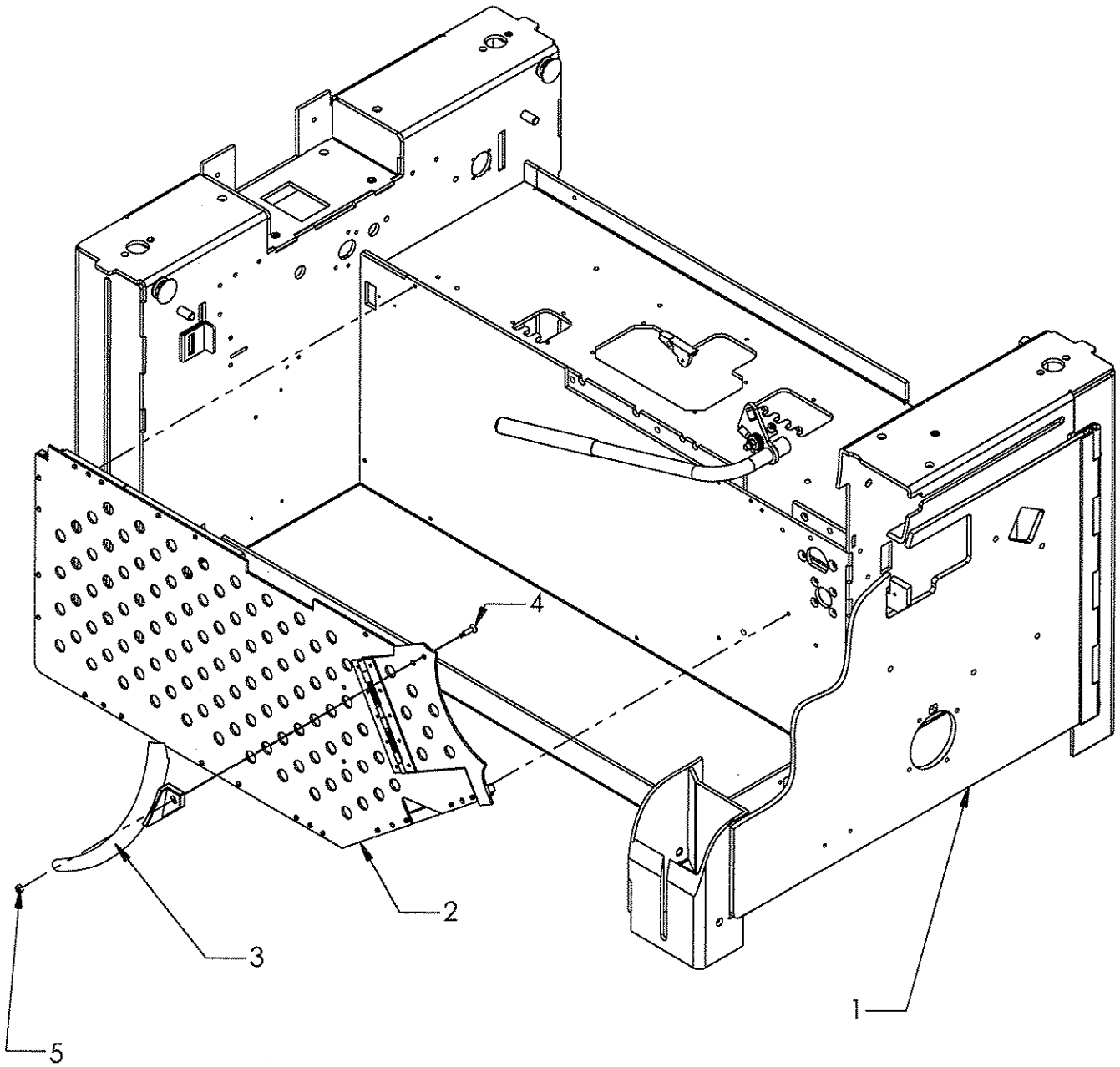

SECTION-8

MACHINE OPTIONS:

INDICATOR LIGHT, LOW STRAP (8-1)

INDICATOR LIGHT ASSEMBLY, AUTO (8-3)

FOOT SWITCH (8-5)

FLOOR LOCK (8-6)

ADJUSTABLE HEIGHT MACHINE LEG (8-7)

DOWN-STREAM PHOTO EYE (8-9)

SEMI-AUTOMATIC PHOTO EYE (8-10)

INTERLOCK KIT (8-13)

PALM BUTTON (8-15)

PACKAGE COMPRESSION:

- INSTALLATION, SINGLE (8-18)
- INSTALLATION, DUAL (8-19)
- SET UP (8-20)
- PARTS LIST, 20 X 15, 28 X 20, 33 X 30 (8-21)
- PARTS LIST, 48 X 20 (8-29)

LBX-PHARMA CONFIGURATION ASSEMBLIES:

- OVERVIEW & INSTALLATION (8-38)
- LID DETECTION (8-39)
- PACKAGE STOP (8-43)
- SIDE GUIDE KIT (8-49)
- SIDE GUIDE KIT W/ ROLLERS (8-51)
- ELECTRICAL SCHEMATIC, 1ϕ (8-53)
- ELECTRICAL SCHEMATIC, 3ϕ (8-61)
- ELECTRICAL ENCLOSURE (8-69)

SPARE PARTS KITS (8-73)

INDICATOR LIGHT ASSEMBLY, LOW STRAP

515525-3

KEY	QTY.	P/N	DESCRIPTION
1	1	515566	PHOTO EYE ASSY.
2	2	432258	M4 X 25 SHCS
3	2	164966	M4 HEX NUT (ZINC)
4	2	185700	M4 LOCKWASHER (ZINC)
5	1	515908	LOW STRAP EYE BRACKET
6	2	010034	M6 X 16 SBHCS (ZINC)
7	2	481889	M6 LOCKWASHER
8	1	515526	INDICATOR LIGHT ASSY.

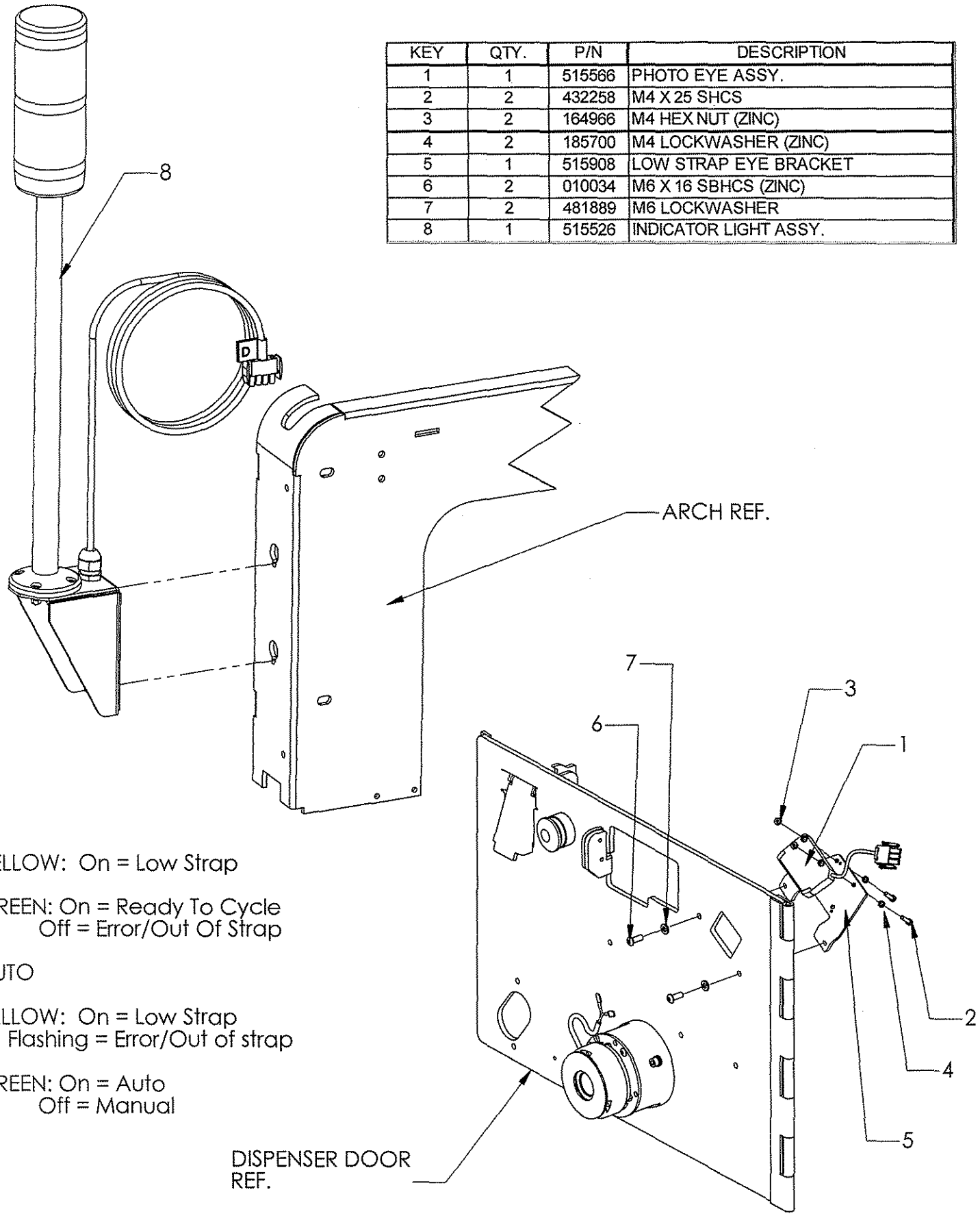

YELLOW: On = Low Strap

GREEN: On = Ready To Cycle
Off = Error/Out Of Strap

AUTO

YELLOW: On = Low Strap
Flashing = Error/Out of strap

GREEN: On = Auto
Off = Manual

KEY	QTY	P/N	DESCRIPTION
1	1	436211	INDICATING LENS (GREEN)
2	1	436209	MOUNTING TUBE
3	4	010028	M5 X 12 SHCS (ZINC)
4	4	187415	M5 LOCKWASHER HC (ZINC)
5	4	169440	M5 HEX NUT (ZINC)
6	1	436208	TUBE MOUNTING PLATE
7	1	434597	CORD GRIP
8	A/R	434577	CABLE
9	1	436218	CONNECTOR PLUG
10	1	436212	INDICATING LENS (YELLOW)
11	3	292942	CONNECTOR PIN
12	1	515528	LIGHT BRACKET WELDMENT
13	2	516406	FOAM STRIP 120MM
14	1	436210	COVER AND BASE
15	2	436213	LAMP 24V
16	1	434363	CABLE ID TAG "D"

WEARING PARTS ARE THOSE ITEMS WHICH ARE UNDERLINED

OPERATOR CONTROL INSTALLATION

USE THE FOLLOWING INSTRUCTIONS TO INSTALL YOUR MACHINE OPTION AS QUICKLY AND SAFELY AS POSSIBLE.

1. DISCONNECT AND LOCKOUT ELECTRICAL POWER FROM MACHINE. REMOVE ALL PACKAGES FROM MACHINE.
2. HANG THE LIGHT ASSEMBLY FROM ANY OF THE TWO AVAILABLE MOUNTING HOLE LOCATIONS. THE MAGNETIC BACK OF THE LIGHT WILL SECURE THE INSTALLATION TO THE MACHINE.
3. INSTALL CONNECTOR "D" INTO RECEPTACLE "D".

THIS COMPLETES THE OPTION INSTALLATION. THE LIGHT WILL NOW OPERATE WHEN THE MACHINE IS PLACED INTO THE AUTOMATIC STRAPPING MODE

INDICATOR LIGHT ASSEMBLY-AUTO

515526-6

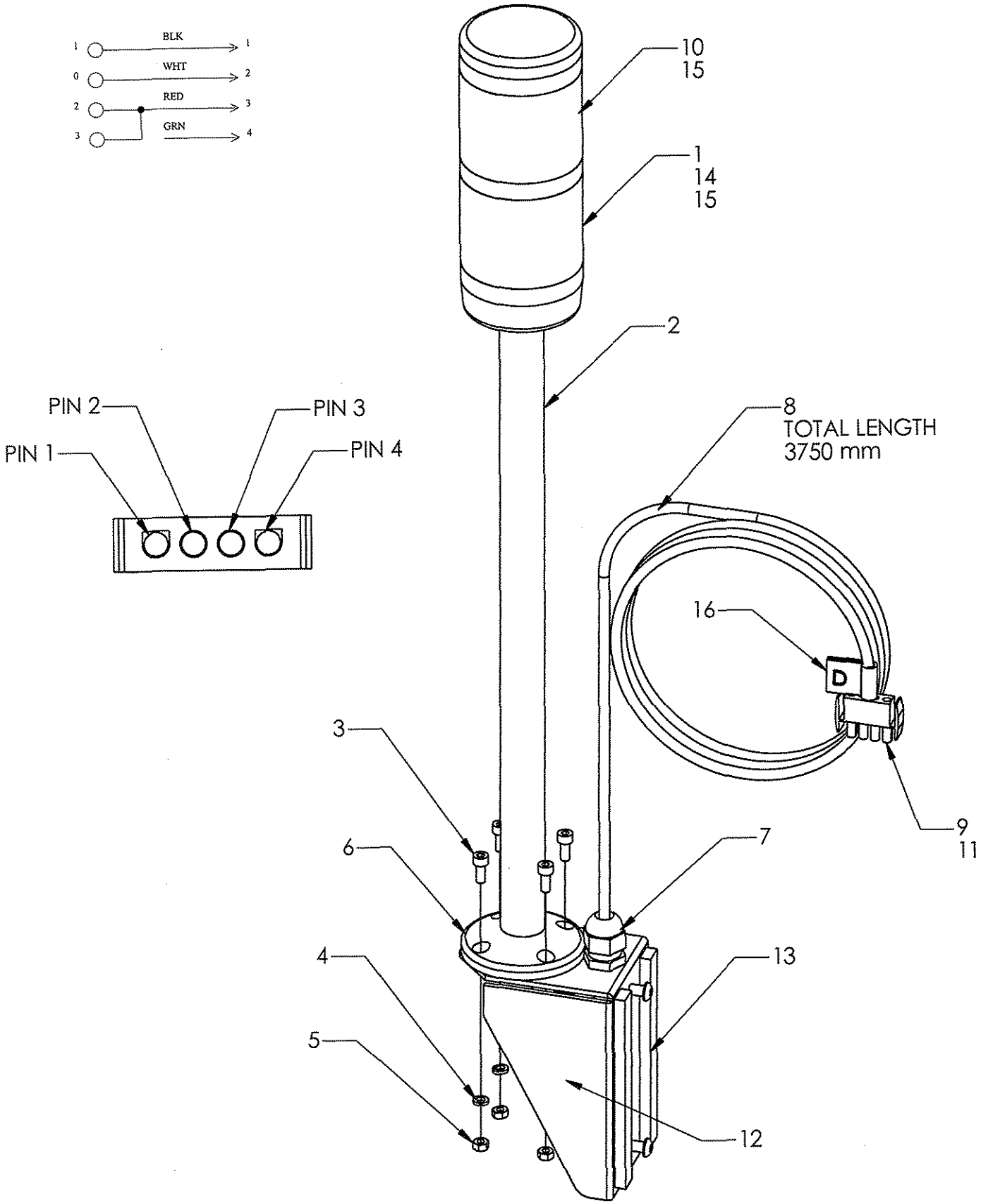

FOOT SWITCH ASSEMBLY

438482-5

KEY	QTY.	PART NO.	DESCRIPTION
1	1	516901	FOOTSWITCH
2	8 FT.	434842	18 AWG CABLE
3	1	434389	CABLE ID TAG "F"
4	1	436218	CONNECTOR PLUG
5	1	433300	WARNING SIGN
6	2	292942	CONNECTOR PIN

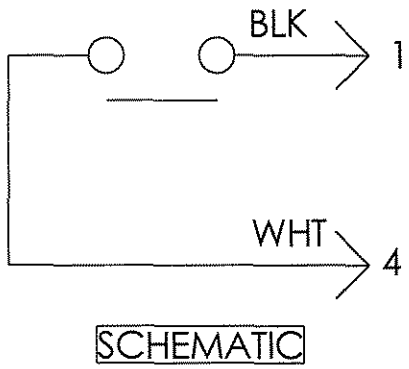

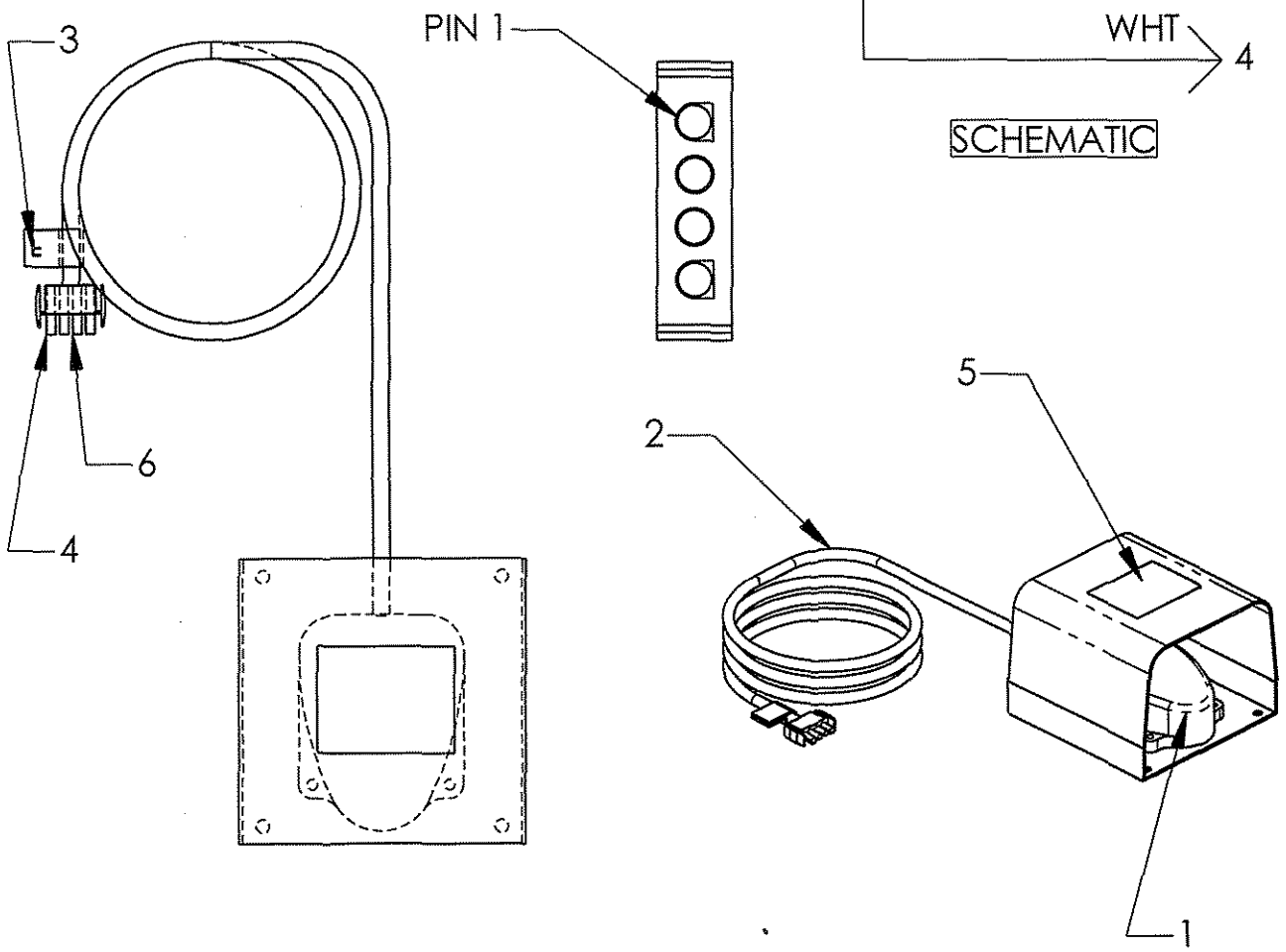

OPERATOR CONTROL INSTALLATION

USE THE FOLLOWING INSTRUCTIONS TO INSTALL YOUR MACHINE OPTION AS QUICKLY AND SAFELY AS POSSIBLE.

1. DISCONNECT AND LOCKOUT ELECTRICAL POWER FROM MACHINE. REMOVE ALL PACKAGES FROM MACHINE.
2. INSTALL CONNECTOR "F" INTO RECEPTACLE "F"
3. PLACE THE FOOT SWITCH IN A SUITABLE LOCATION WHICH CAN BE EASILY ACCESSED.

THIS COMPLETES THE OPTION INSTALLATION. THE FOOT SWITCH WILL NOW CYCLE THE MACHINE WHEN DEPRESSED WHILE IN THE MANUAL CYCLE STRAPPING MODE.

FLOOR LOCK KIT

515960-3

ITEM NO.	QTY.	PART NO.	DESCRIPTION
1	REF	515394	LEG WELDMENT
2	4	515946	4" SWIVEL CASTER- W/O LOCK
4	12	251266	M8 FLATWASHER
5	8	252266	M8 X 30 HHCS
6	20	162381	M8 LOCKWASHER (ZINC)
7	20	164953	M8 HEX NUT (ZINC)
8	1	515961	FLOOR LOCK PLATE
9	1	515995	STANDARD FLOOR LOCK
11	12	011031	M8 X 25 HHCS
12	2	515958	FOOT ACTIVATED SWIVEL LOCK
13	4	420322	FENDER WASHER

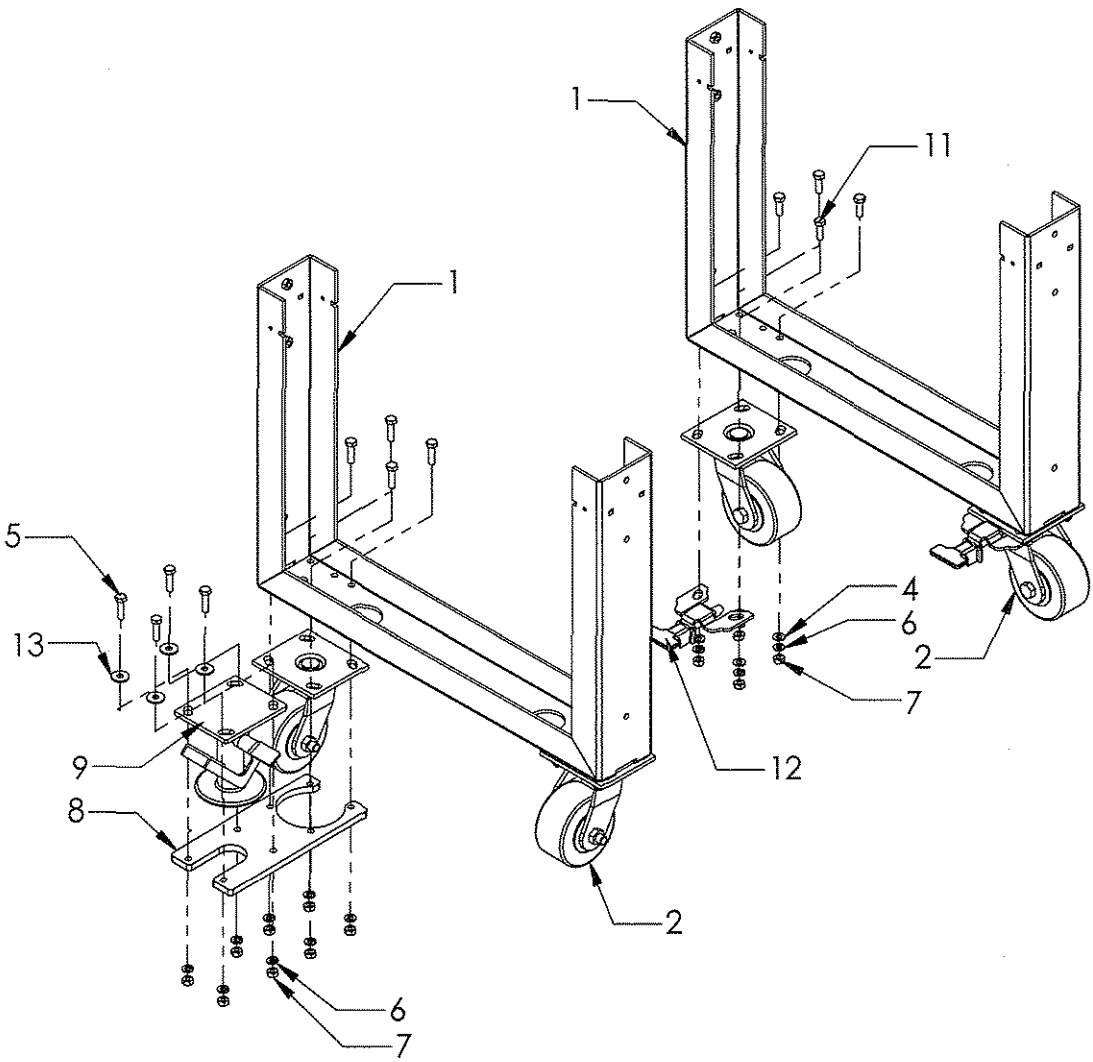

ADJUSTABLE LEG OPTION

515500-4

KEY	QTY.	PART NO.	DESCRIPTION
1	REF	515375	FRAME WELDMENT
2	4	515510	ACME NUT, 3/4-6
3	4	515511	NUT PLATE WELDMENT
4	4	515501	ACME SCREW RETAINER, TOP
5	4	515502	ACME SCREW RETAINER, BOTTOM
6	2	515503	#35 ROLLER CHAIN
7	8	515504	FLANGE BEARING, ACME SCREW
8	4	515508	WASHER, INDICATOR
9	4	515509	LABEL, HEIGHT INDICATOR
10	4	515507	KEY
11	4	515506	SPROCKET
12	4	515505	ACME THREADED SHAFT
13	16	481889	M6 LOCKWASHER (ZINC)
14	16	433920	M6 X 20 SHCS (ZINC)
15	24	162381	M8 LOCKWASHER (ZINC)
16	4	420322	M8 FENDER WASHER (ZINC)
17	8	160331	M8 X 20 SHCS (ZINC)
18	8	262617	M6 FLATWASHER (ZINC)
19	4	280063	Ø5 X 12 ROLL PIN
20	2	515945	4" SWIVEL - TOTAL LOCK CASTER
21	2	515946	4" SWIVEL - W/FOOT ACTIVATED SWIVEL LOCK
23	16	280335	M8 FLAT WASHER (GL&WU)
24	16	164953	M8 NUT (GLV&WU-ZINC)
25	-2	515456	4" SWIVEL - TOTAL LOCK-STEM CASTER
26	-2	515457	4" SWIVEL - W/O LOCK-STEM CASTER
27	2	515958	FOOT ACTIVATED SWIVEL LOCK
28	16	011031	M8 X 25 HEX SCREW (GLV)
N/S	1	516195	10 MM, DEEP SOCKET
N/S	1	516195	3/8" SQ DRIVE SOCKET WRENCH
N/S	1	516195	METRIC HEX KEY SET

ADJUSTABLE LEG OPTION

515500-4

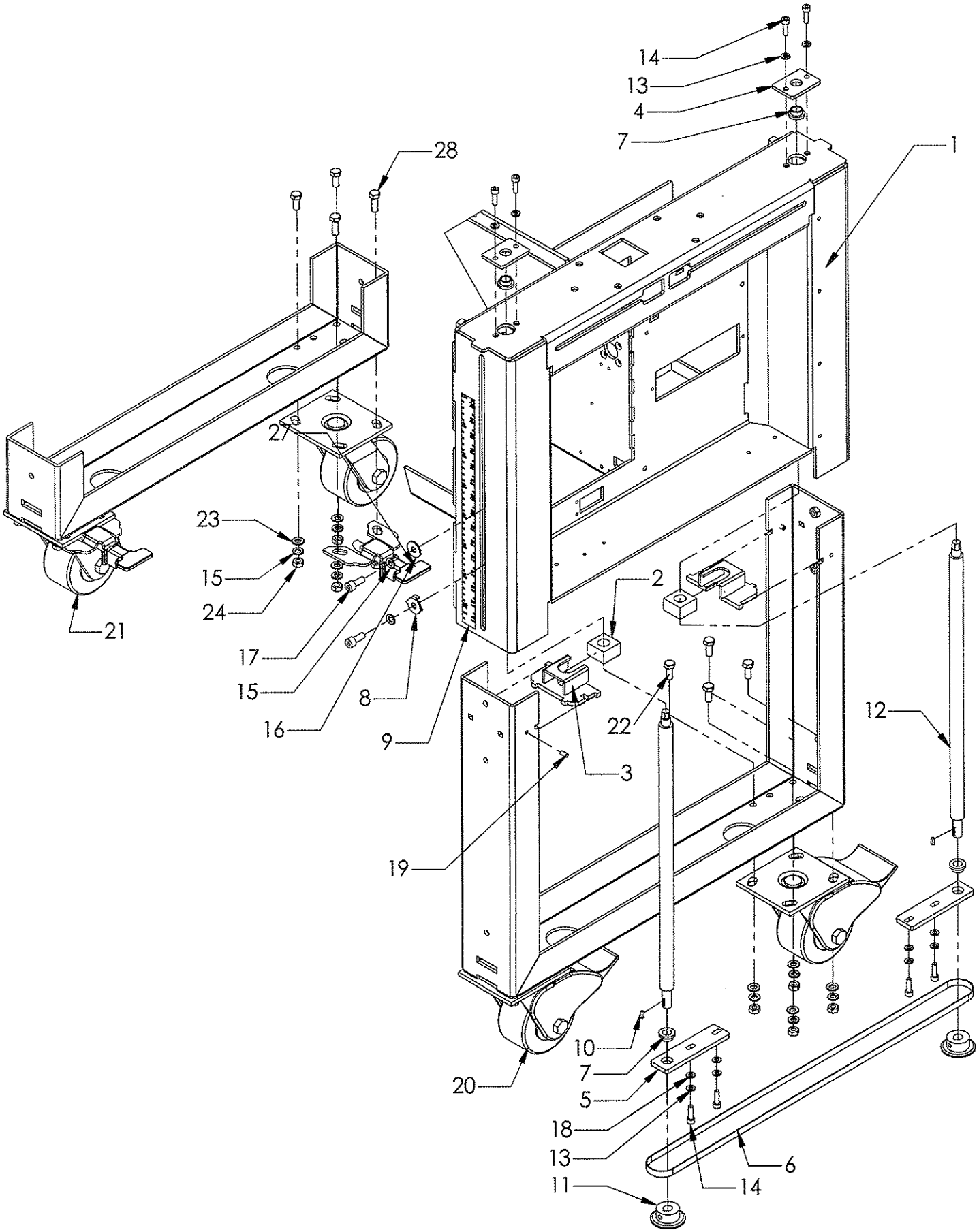

DOWNSTREAM PHOTO EYE ASSEMBLY

515540-6

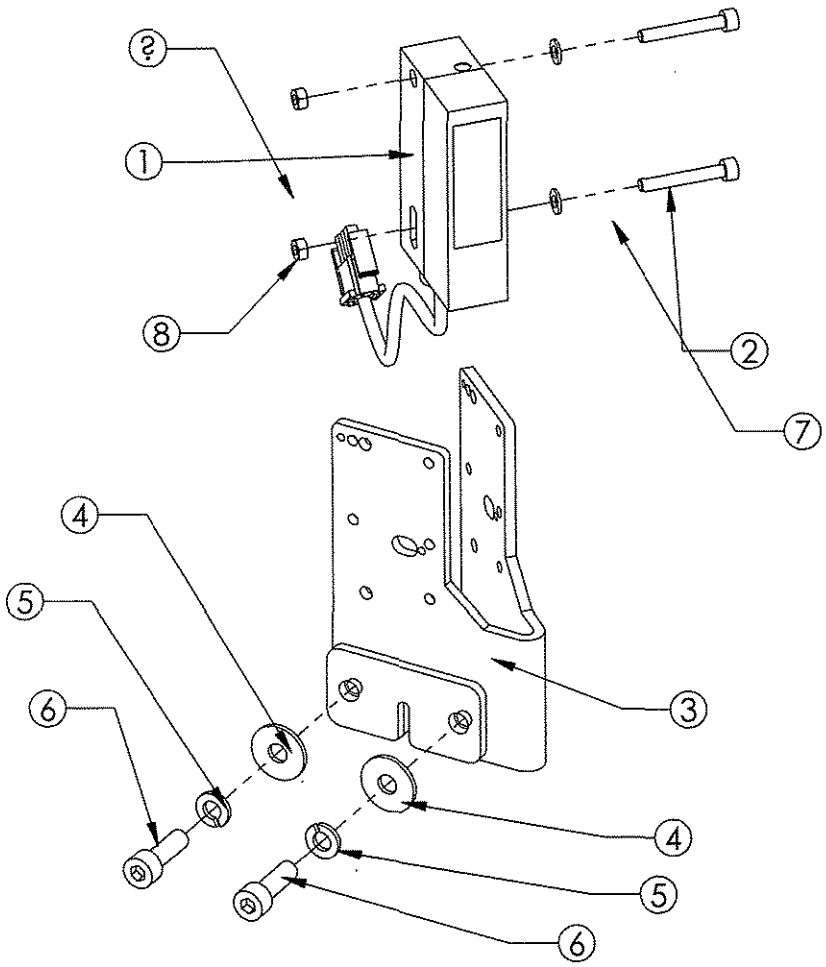

ITEM NO.	QTY.	PART NO.	DESCRIPTION
1	1	515564	PHOTO EYE ASSEMBLY
2	2	170105	M5 X 35 SHCS (ZINC)
3	1	515541	DOWNSTREAM EYE BRACKET WELDMENT
4	2	420322	M8 FENDER WASHER (ZINC)
5	2	162381	M8 LOCKWASHER (ZINC)
6	2	421268	M8 X 25 SHCS
7	2	171571	M5 FW (ZINC)
8	2	169440	M5 HEX NUT (ZINC)

INSTALLATION:
1. DISCONNECT AND LOCK-OUT ELCTRIC POWER TO THE MACHINE.
2. MOUNT THE ASSEMBLY TO THE PHOTO EYE SLOT (LOCATED ABOVE THE DISPENSER DOOR). USE THE HARDWARE AS SHOWN. IF THE ASSEMBLY IS TO BE USED ON THE OPPOSITE SIDE OF THE MACHINE, MOVE THE PHOTO EYE, KEY 1, TO THE OPPOSITE FACE OF THE BRACKET, KEY 3.
3. THREAD THE CABLE THROUGH THE SLOT IN THE MACHINE FRAME. REMOVE THE PLUG ASSEMBLY FROM 3CRE AND CONNECT THE PHOTO EYE PLUG INTO THE 3CRE RECEPTICLE (LOCATED BEHIND THE DISPENSER DOOR).

DESCRIPTION OF OPERATION:
1. THIS FEATURE IS OPERATIONAL ONLY WHEN THE MACHINE IS IN THE AUTO MODE.
2. THE PHOTO EYE BEAM SHOULD BE DIRECTED AT THE INCOMING PACKAGE FLOW.
3. IF NO PACKAGE IS DETECTED, THE CONVEYOR WILL SHUT DOWN AFTER APPROXIMATELY 5 MINUTES.
4. THE CONVEYOR WILL RESTART WHEN THE PHOTO EYE DETECTS A PACKAGE ON THE INFEED CONVEYOR.

INSTALLING THE OPTION:

1. DISCONNECT AND LOCKOUT ELECTRICAL POWER FROM MACHINE. REMOVE ALL PACKAGES FROM THE MACHINE.
2. UNPACK THE PHOTO–EYE ASSEMBLY AND INSPECT ALL PARTS FOR ANY POSSIBLE TRANSIT DAMAGE.
3. CONNECT THE PHOTO-EYE'S PLUG INTO SOCKET (F1 OR F2) FOUND BEHIND THE DISPENSER DOOR.
4. INSTALL THE PHOTO-EYE ENCLOSURE TO THE FRONT OR REAR OF THE FRAME AS SHOWN:

   A. SMALL CHUTE ARCHES (16 X 10, 20 X 15, 28 X 20, & 33 X 30) MOUNT TO THE FRAME

   B. LARGE CHUTE ARCH MOUNTING (48 X 48 & 48 X 20) MOUNT TO PHOTOEYE BRACKET

5. THE EYE SHOULD FUNCTION WHEN A TEST SHEET IS HELD AT THE ANVIL IN THE PATH OF THE PHOTO EYE BEAM. THE EYE SHOULD NOT OPERATE WHEN THE TEST SHEET IS HELD AT A POSITION EVEN WITH THE OPPOSITE SIDE OF THE MACHINE FRAME. THE PHOTO EYE RANGE CAN BE ADJUSTED BY ROTATING THE ADJUSTING SCREW ON THE PHOTO EYE.

OPERATING THIS OPTION:

THE CONTROL SWITCH ON TOP OF THE PHOTO-EYE ENCLOSURE HAS THREE (3) POSITIONS FOR OPERATING YOUR MACHINE. THE SWITCH CAN BE CHANGED AT ANY TIME WHILE OPERATING THE MACHINE.

FIRST POSITION (SINGLE STRAP MODE)

THIS POSITION, WHEN SELECTED, WILL PLACE ONLY ONE STRAP ON A PACKAGE FOR EVERY TIME THE PHOTO-EYE BEAM IS TRIGGERED. *NOTE: THE POTENTIOMETER HAS NO EFFECT. THE CYCLE STARTS AS SOON AS THE PHOTOEYE BEAM IS TRIGGERED.*

SECOND (MIDDLE) POSITION (OFF)

THIS POSITION, WHEN SELECTED, WILL DISABLE THE PHOTO-EYE ALLOWING THE MACHINE TO BE OPERATED WITH THE CYCLE BUTTON, FOOT PEDAL, OR PALM BUTTON.

THIRD POSITION (MUTIPLE STRAP MODE)

THIS POSITION, WHEN SELECTED, WILL CONTINUOUSLY PLACE STRAPPING ON A PACKAGE FOR AS LONG AS THE PHOTO-EYE BEAM IS TRIGGERED. *NOTE: THE 1ST CYCLE STARTS AS SOON AS THE PHOTOEYE BEAM IS TRIGGERED. THE POTENTIOMETER ADJUSTS THE TIME BETWEEN SUBSEQUENT STRAPS.*

SEMI-AUTO PHOTOEYE BOX ASSY 515050-14

	KEY	QTY.	PART NO.	DESCRIPTION
	1	1	515515	PHOTO EYE PLATE
	2	1	438467	PHOTO EYE ENCLOSURE ASSEMBLY
	3	1	434540	KNOB (TIMERS)
	4	1	434539	POTENTIOMETER (TIMERS)
	5	1	436228	SELECTOR SWITCH (3 POS)
	6	1	436229	MOUNTING BASE
	7	1	438295	CORD GRIP (PG 9)
	8	1	515988	PHOTO EYE
	9	1	266877	TIMER
	10	4	175914	M5 X 12 SBHCS (ZINC)
	11	8	432258	M4 X 25 SHCS
	12	10	164966	M4 HEX NUT (ZINC)
	13	6	171570	M4 FLATWASHER (ZINC)
	14	1	434577	CABLE
	15	1	436218	CONNECTOR PLUG
	16	1	438735	PHOTOEYE LABEL
	17	2	272487	SOCKET
	18	2	272486	24 V RELAY
	19	6	434284	M4 X 30 SHCS
	20	6	185700	M4 LOCKWASHER HC (ZINC)
	21	1	434389	CABLE ID TAG "F"
	22	1	515516	BRACKET WELDMENT, PHOTO EYE
	23	2	515520	ROSETTE KNOB, M8
	24	1	515519	NUT BAR
	25	4	292942	PIN
	26	1	434598	TIMER
	27	2	421268	M8 X 25 SHCS
	28	4	421801	M5 X 20 SBHCS
	29	1	515521	GROMMET
	30	2	171570	M4 FLAT WASHER
	31	4	185700	M4 LOCK WASHER
	32	1	436230	ANTI ROTATION RING
	33	1	515910	PHOTOELECTRIC SENSOR MOUNTING PLATE
	34	2	432183	SFHC M3x20 (GLV&WU)
	35	2	420216	SHCS M4x10 (GLV&WU-ZINC)
	36	2	174364	M3 HEX NUT
	37	4	280850	M6 LOCK WASHER
USE ON: 16x10, 20x15, 28x20, 33x30 ONLY	38	4	165366	BHCS M6 X 12
	39	1	515985	MIRROR BRACKET - ENTRY SIDE
	40	2	292217	REFLECTIVE TAPE
	41	1	515986	MIRROR BRACKET - EXIT SIDE
	42	2	436383	LABEL DOMESTIC
		2	436352	LABEL GLOBAL
USE ON: 48x20, 48x48 ONLY	43	1	515980	MIRROR BRACKET
	44	3	433919	SCREW SHCS M6X12 (WU-ZINC)
	45	2	516175	REFLECTOR
	46	4	262551	M3X8 SHCS
	47	4	162568	M3 LOCK WASHER
	48	4	256901	M3 FLAT WASHER

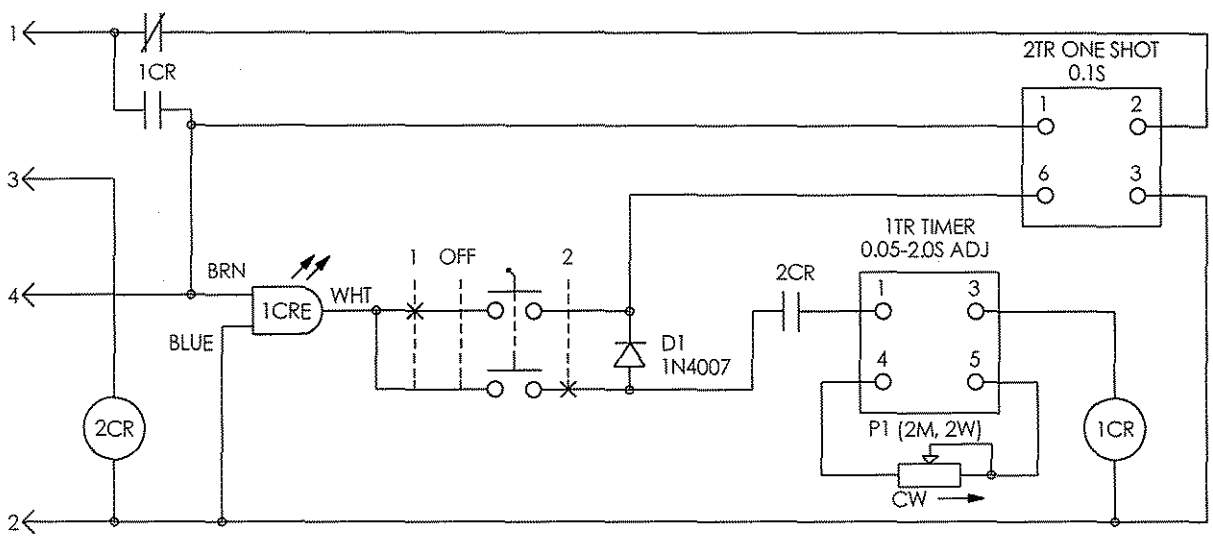

SEMI-AUTO PHOTOEYE BOX ASSY

515050-14

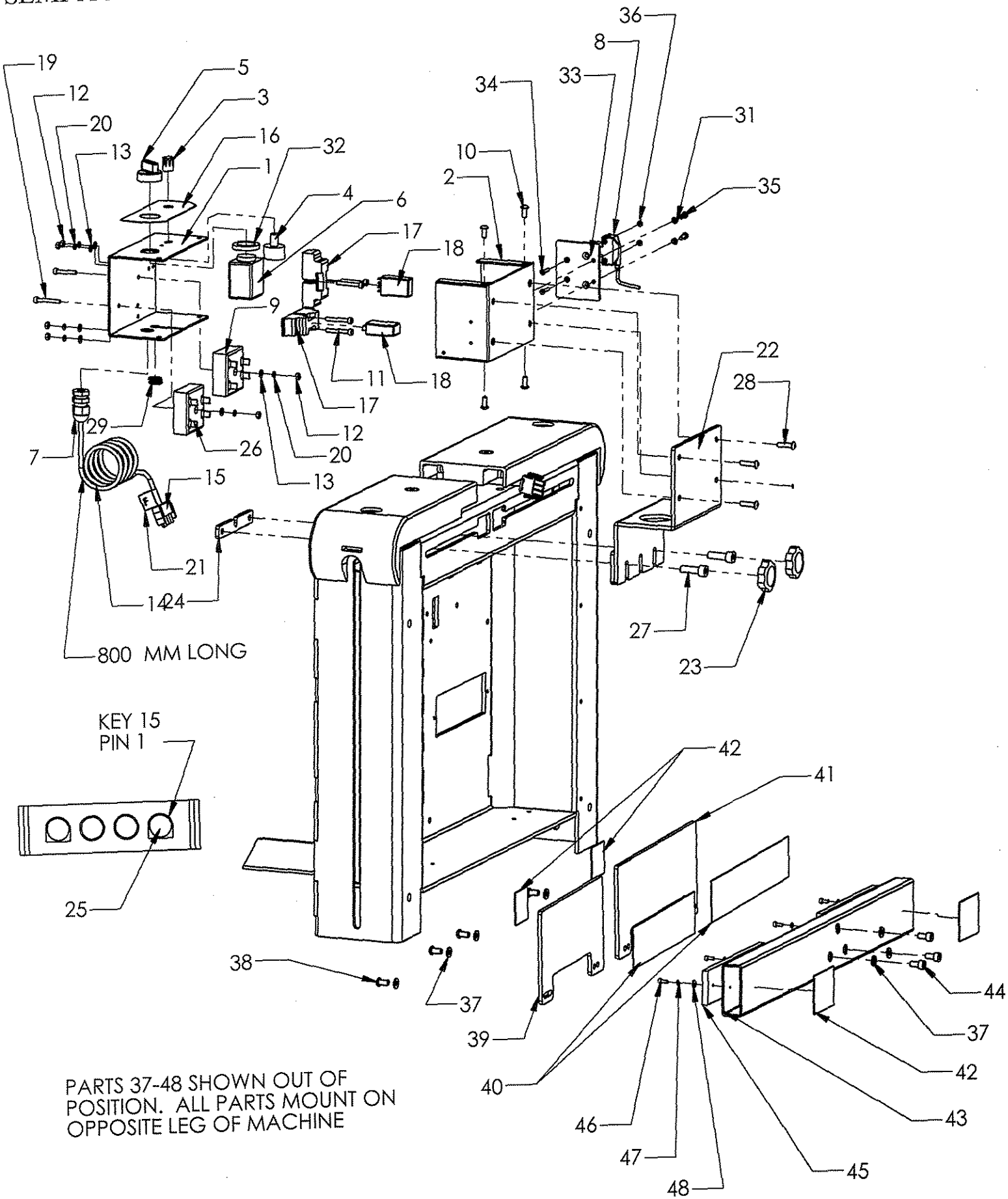

PARTS 37-48 SHOWN OUT OF POSITION. ALL PARTS MOUNT ON OPPOSITE LEG OF MACHINE

KEY	QTY	P/N	DESCRIPTION
1	1	438421	CONNECTOR HOUSING ASSEMBLY
2	1	438422	PLUG AND CABLE ASSEMBLY
N/S	2	434500	RELAY (SEE NOTE)
4	4	433916	M4 X 12 SHCS
5	4	185700	M4 LOCKWASHER HC
6	1	438215	INTERLOCK JUMPER PLUG
7	1	438413	INTERLOCK KIT INSTRUCTION DRAWING
8	1	436354	INFORMATION SIGN
9	1	436047	8" LANYARD
10	1	510451	INFORMATION SIGN

INSTALLATION:

1 -- LOCATE & REMOVE THE COVER PLATE (NEAR THE ELECTRIC PANEL) .
2 -- MOUNT CONNECTOR HOUSING ASSEMBLY.
3 -- DISCONNECT "E" PLUG FROM RECEPTACLE INSIDE ELECTRICAL ENCLOSURE.
4 -- CONNECT PLUG FROM CONNECTOR HOUSING ASSEMBLY TO RECEPTACLE "E" INSIDE CONTROL ENCLOSURE.
5 -- INSTALL RELAYS IN 5CR AND 4CR SOCKETS ON CONTROL PANEL.
6 -- WIRE CONECTOR PLUG ASSEMBLY AND INSERT INTO CONNECTOR HOUSING ASSEMBLY.

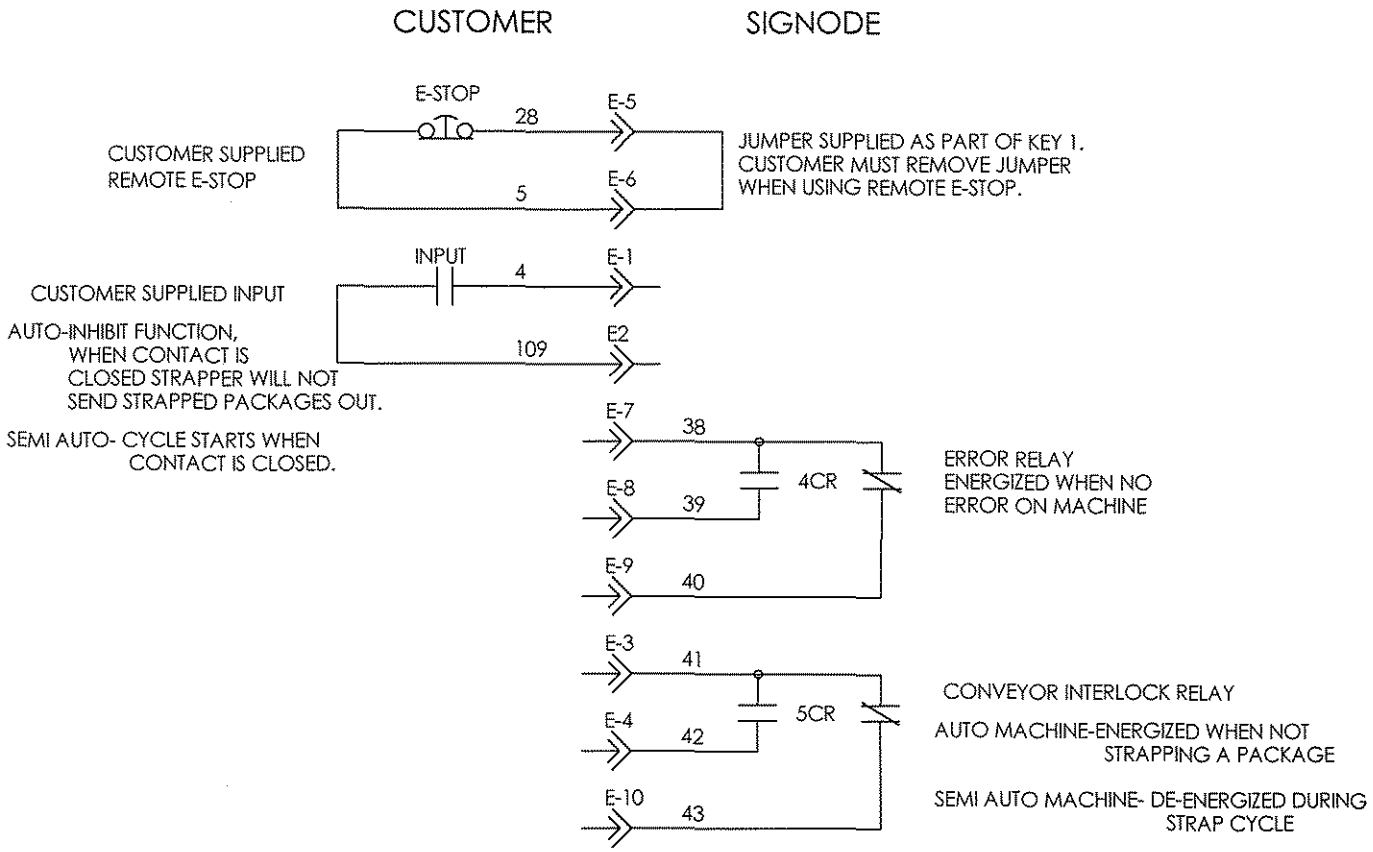

INTERLOCK KIT (LBX 2300/2330)

438413-14

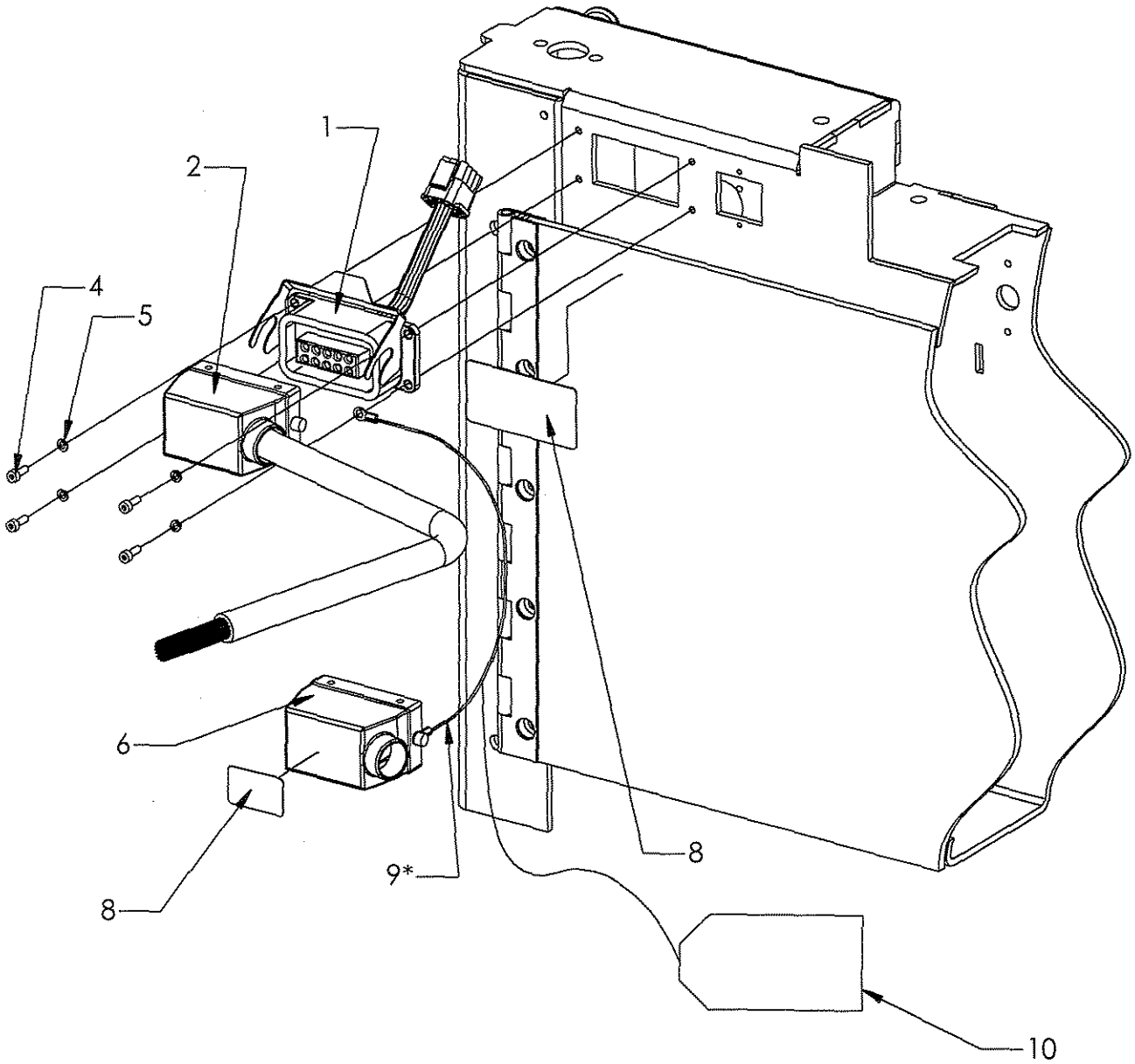

ATTENTION: WHEN USING THE CUSTOMER SUPPLIED REMOTE E-STOP, MACHINE WILL NOT RUN WITHOUT WIRES E-5 & E-6 JUMPERED.

USE AUXILLARILY JUMPER PLUG (KEY 6) WHEN RUNNING MACHINE WITHOUT CONVEYOR INTERLOCK CABLE.

*REMOVE STUD FROM KEY 6 & ATTACH EYE OF LANYARD KEY 9 AS SHOWN

KEY	QTY.	PART NO.	DESCRIPTION
1	1	434436	CORD GRIP (PG 11)
2	A/R	434577	CABLE
3	1	434389	CABLE ID TAG "F"
5	1	436235	PALM BUTTON
6	1	434383	LABEL
7	1	436218	CONNECTOR PLUG
8	1	515577	OPERATOR BOX ASSY, SEMI
9	1	515629	COVER PLATE, PALM
10	4	292942	CONNECTOR PINS
11	6	175914	M5 X 12 SBHCS (ZINC)

OPERATOR CONTROL INSTALLATION

USE THE FOLLOWING INSTRUCTIONS TO INSTALL YOUR MACHINE OPTION AS QUICKLY AND SAFELY AS POSSIBLE.

1. DISCONNECT AND LOCKOUT ELECTRICAL POWER FROM MACHINE. REMOVE ALL PACKAGES FROM MACHINE.
2. INSTALL CONNECTOR "F" INTO RECEPTACLE "F".
3. PLACE THE PALM SWITCH ON THE CHUTE ARCH COVER IN THE SAME MANNER AS THE STANDARD OPERATOR.

THIS COMPLETES THE OPTION INSTALLATION. THE PALM SWITCH WILL NOW CYCLE THE MACHINE WHEN DEPRESSED WHILE IN THE MANUAL CYCLE STRAPPING MODE.

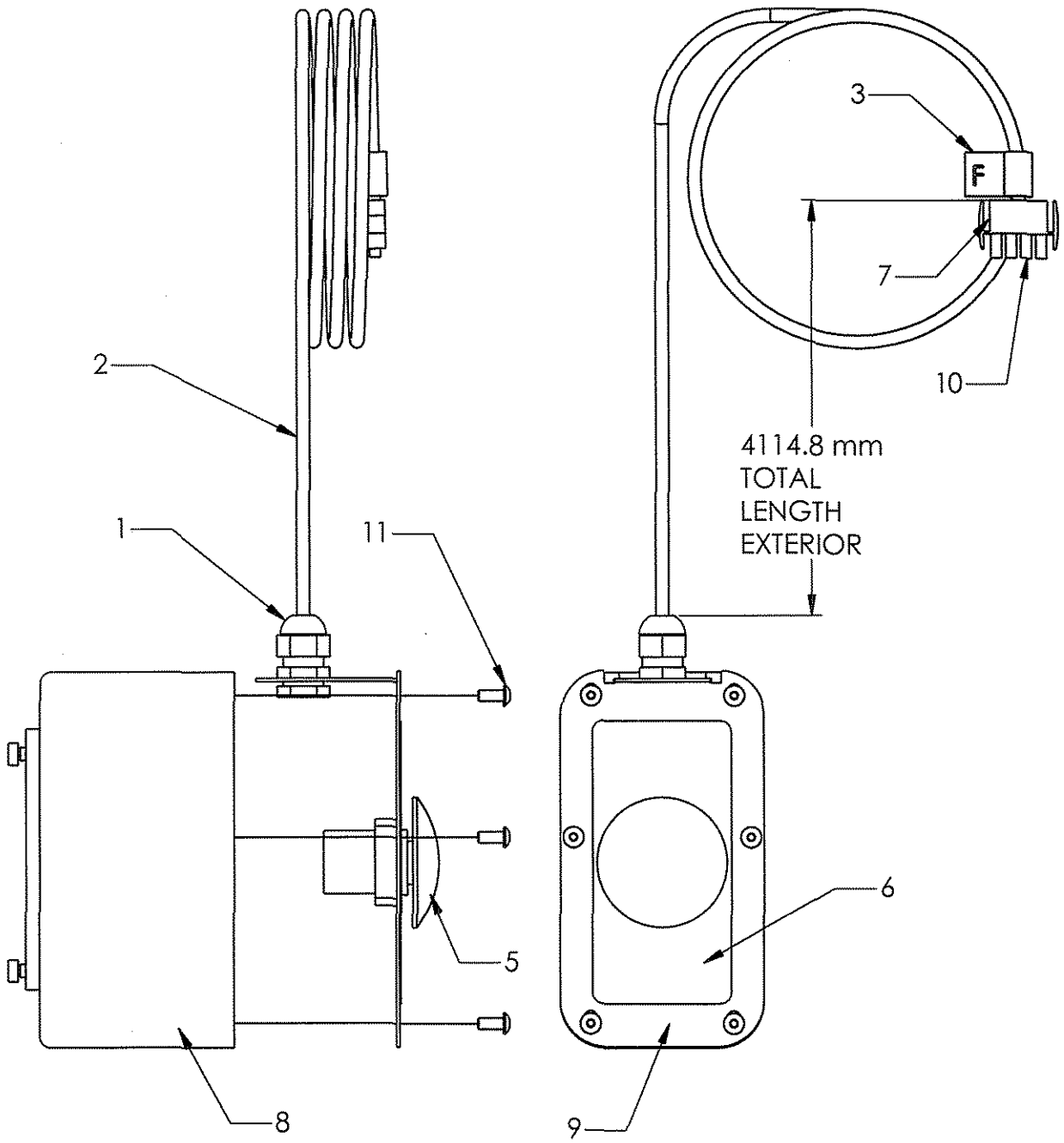
3
F
7
10
2
4114.8 mm
TOTAL
LENGTH
EXTERIOR
1
11
6
5
8
9

PACKAGE COMPRESSION, INSTALLATION (Single Compression)

Use the following instructions to install your machine option as quickly and safely as possible.

1. Disconnect and lockout electrical power from machine. Remove all packages from machine. Unpack the compression unit and inspect for any possible transit damage.

2. Install compression assembly to existing chute arch using the hardware provided.

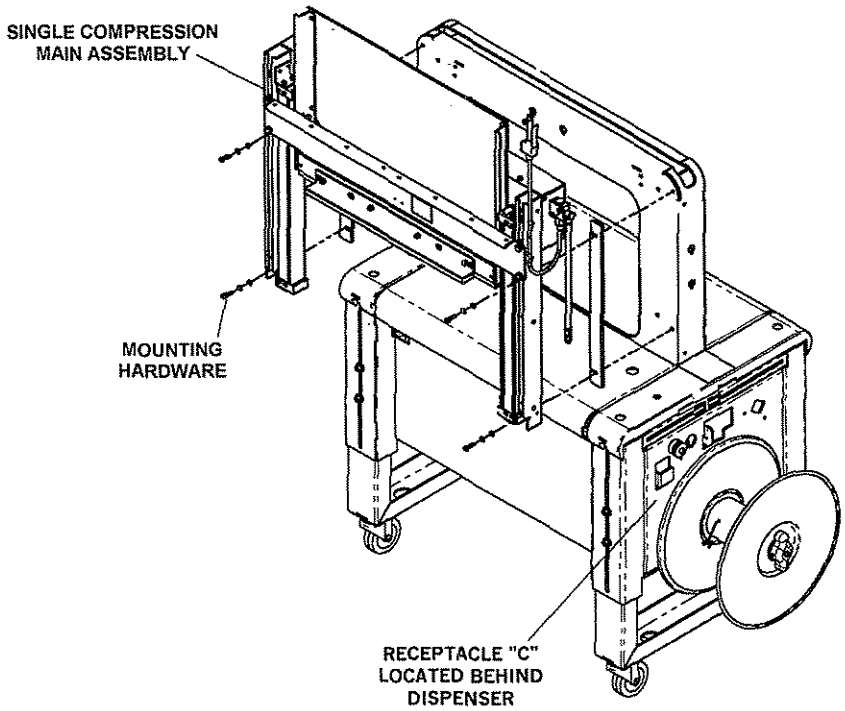

3. Plug connector "C" into receptacle "C" located behind the dispenser access door.

4. Inspect pneumatic supply fittings. Select and install the appropriate pneumatic quick disconnect male fitting from the two sizes provided.

5. Connect air supply. This completes the option installation. The clamp will now operate on every cycle when selected to ON. However, please review Set-Up to adjust the compression assembly for maximum efficiency.

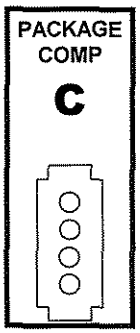

PACKAGE COMPRESSION, INSTALLATION (Dual Compression)

Use the following instructions to install your machine option as quickly and safely as possible.

1. Disconnect and lockout electrical power from machine. Remove all packages from machine. Unpack the compression units and mounting brackets. Inspect all items for any possible transit damage.

2. Install the left and right end plates to the chute arch using the hardware provided. Be sure to place the U-brackets between the chute arch and end plate as shown. The U-bracket is used to tie the front and rear clamp assemblies together.

3. Install the front clamp assembly to the end plates using the hardware provided. Install the hardware which connects the front clamp to the U-brackets.

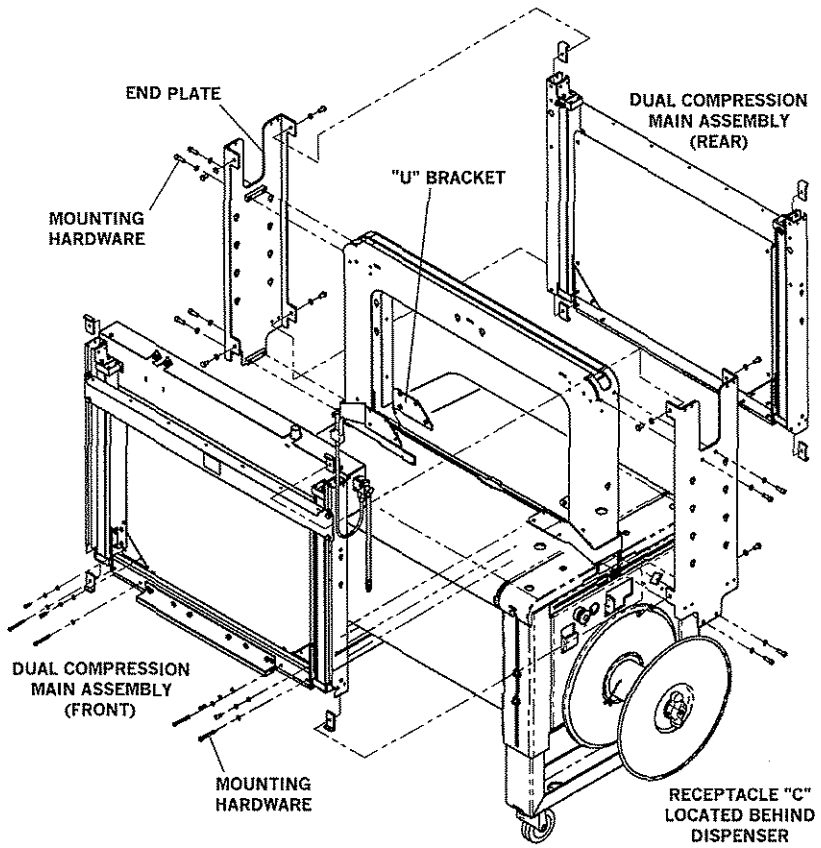

4. Install the rear clamp assembly to the end plates using the mounting hardware provided. Install the hardware which connects the rear clamp to the U-brackets.

5. Run the cabling down through the end of the chute arch and secure with cable tires.

6. Plug connector "C" into receptacle "C" and lock in place with a 1/4 turn.

7. Inspect pneumatic supply fittings. Select and install the appropriate pneumatic quick disconnect male fitting from the two sizes provided.

8. Connect air supply. This completes the option installation. The clamp will now operate on every cycle when selected to ON. However, please review Set-Up to adjust the compression assembly for maximum efficiency.

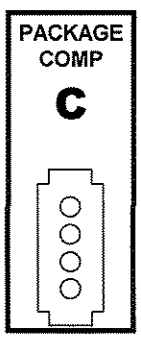

PACKAGE COMPRESSION, SET-UP

STOP BAR:

Loosen screws and adjust stop bar position to accommodate largest package size. The stop bar should must be horizontal to work properly. Tighten screws securely after adjust bar height.

CLAMP SOAK TIME:

1. Remove the electrical enclosure cover to gain access to the PLC.
2. Adjust the clamp Soak-Time as required for your application. Review information shown on Pages 5-1 & 5-2 of this manual for specific information on clamp Soak-Time adjustment.
   NOTE: Adjustment information can also be found on the inside of the electrical enclosure access door.

CONVEYOR START-UP DELAY:

1. Remove the electrical enclosure cover to gain access to the PLC.
2. Adjust the conveyor start-up delay as required for your application. Review information shown on Pages 5-1 & 5-2 of this manual for specific information on the delay adjustment.
   NOTE: Adjustment information can also be found on the inside of the electrical enclosure access door.

CLAMP BAR PRESSURE:

Adjust inlet air pressure as desired for your packaging requirements. Adjust the inlet pressure from the top of the compression enclosure as follows:

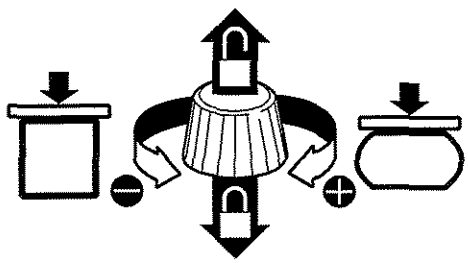

1. Pull up on the control knob to unlock the regulator.
2. Turn the knob to the left to increase the clamp pressure. Turn the knob to the right to decrease the clamp pressure.
3. Push the control knob down to lock the new setting in place.

CLAMP BAR SPEED

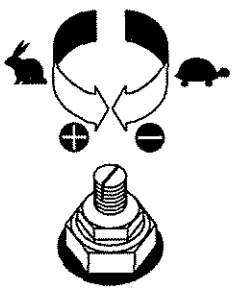

The clamp bar's Up speed and Down speed can be adjusted as desired for your packaging requirements. Adjust the flow controls from the top of the compression enclosure as follows:

1. Loosen the lock nut which secures the flow control setting.
2. Turn the flow control screw inward to decrease the clamp speed. Turn the flow control screw outward to increase the clamp speed.
3. Using a test package, test the bar speed by pressing the cycle button with the clamp switch turned to on.
4. Tighten the lock nut to secure the adjustment.

AIR FILTER

The air filter can be accessed by removing the clamp enclosure cover. Inspect the air filter periodically. Clean and empty as required. *NOTE: This system is designed to run unlubricated, but clean uncontaminated air is essential for optimum component perfomance.*

REFERENCE THIS PAGE FOR DETAILS A, B & E		SINGLE COMPRESSION						DUAL COMPRESS.	
CHUTE SIZE		20" X 15"		28" X 20"		33" X 30"		28" X 20"	
BILL OF MATERIALS		515042		438485		438486		515043	
KEY	DESCRIPTION	QTY.	PART #	QTY.	PART #	QTY.	PART #	QTY.	PART #
1	SUPPORT COLUMN	2	510169	2	435206	2	435234	4	435206
2	FOOT MOUNT, CYLINDER			4	435215			8	435215
3	BAND CYL. RIGHT	1	510168	1	435228	1	435229	2	435228
4	BAND CYL. LEFT	1	510167	1	435256	1	435257	2	435256
5	CLAMP BAR WELDMENT	1	510171	1	435230	1	515440	2	435230
6	LXN GRD SUPPORT ASY, LH	1	510188	1	438826	1	438828	2	438826
7	LXN GRD SUPPORT ASY, RH	1	510189	1	438825	1	438827	2	438825
8	LEXAN GUARD, SLIDE	1	510172	1	435231	1	515442	2	435231
9	COMPRESSION HOUSING	1	510175	1	435232	1	435237	2	435232
10	M5 LOCKWASHER (ZINC)			28	010076			28	010076
11	NUT PLATE, STOP BAR			2	435226			4	435226
12	STOP BAR	1	510183	1	435227	1	435235	2	435227
13	M5 X 12 SHCS (FLANGED ZINC)			2	272418			2	272418
14	COMP. HOUSING COVER	1	510173	1	435233	1	435238	1	435233
15	PAD, 12.7 THICK X 35 WIDE			A/R	435210			A/R	435210
16	PAD, 12.7 THICK X 18 WIDE			A/R	435211			A/R	435211
17	M6 LOCKWASHER (ZINC)			8	481889			20	481889
18	M8 X 20 HHCS (ZINC)			4	252261			12	252261
19	M8 LOCKWASHER (ZINC)			4	280807			20	280807
20	M5 X 16 SHCS (ZINC)			12	011214			12	011214
21	M5 FLATWASHER (ZINC)			12	171571			12	171571
22	M6 X 25 SHCS (ZINC)			8	281108			12	281108
23	M6 FLATWASHER (ZINC)			4	262617			8	262617
24	M5 X 10 SBHCS (ZINC)			4	170118			8	170118
25	M5 X 12 SHCS (ZINC)			16	010028			32	010028
26	WARNING SIGN			1	286298			1	286298
27	WIDE PLATEN	OPTION		1	435214			2	435214
28	COMPRESSION SPACER	2	515443	2	515446	2	515447	N/A	
29	M6 X 16 SHCS (ZINC)	N/A		N/A		N/A		8	165438
30	M6 X 55 SHCS (ZINC)	N/A		N/A		N/A		8	435288
31	M8 X 25 SHCS (ZINC)	N/A		N/A		N/A		8	421268
32	DUAL COMPRESS. U-BRACK	N/A		N/A		N/A		2	515448
33	DUAL COMPRESS. MTG. BRACK	N/A		N/A		N/A		2	515250
34	DUAL COMPRESS. LOCK TAB	N/A		N/A		N/A		8	515253

WEARING PARTS ARE THOSE ITEMS WHICH ARE UNDERLINED

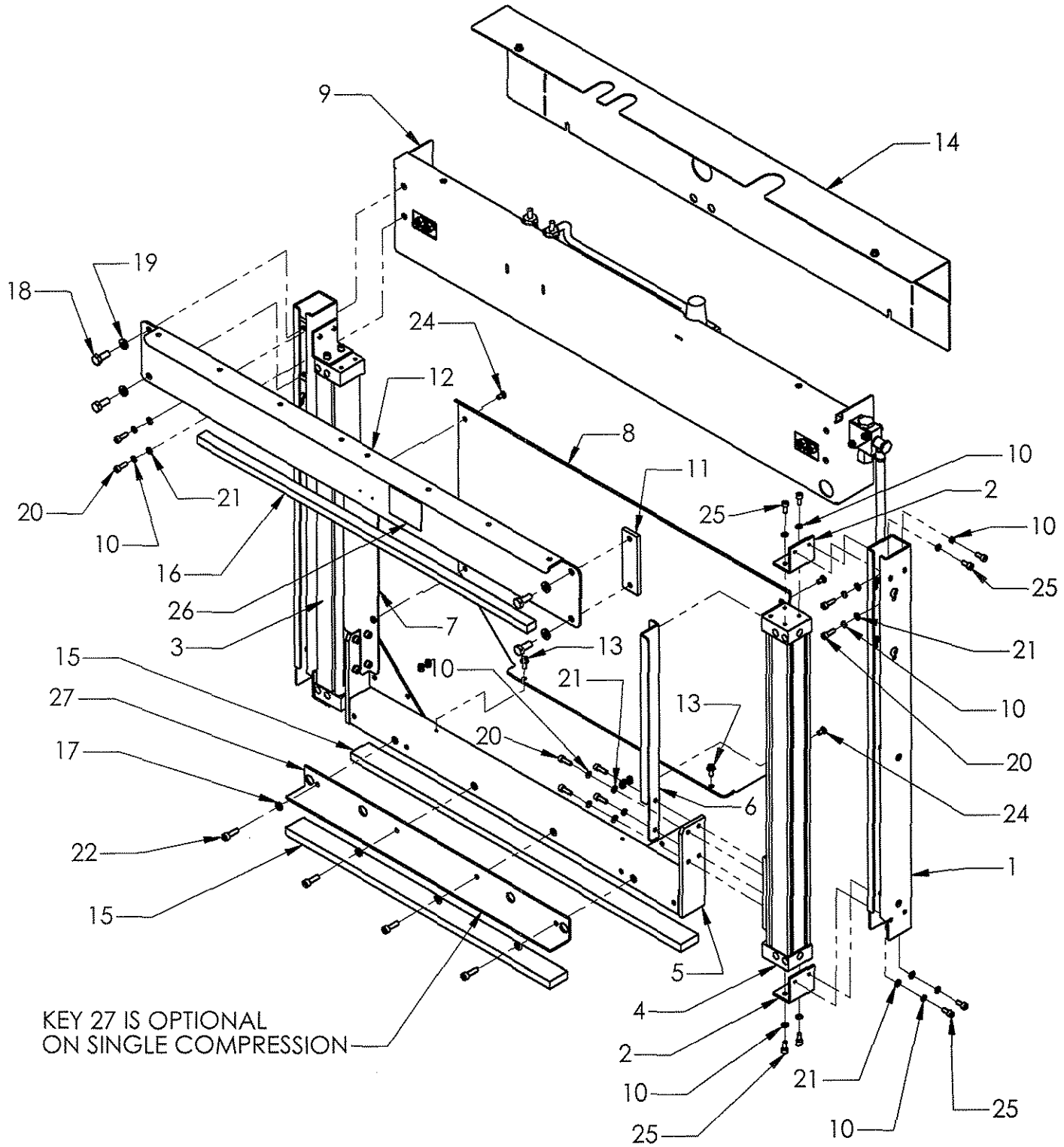
9
14
19
18
24
12
8
11
10
2
25
10
25
20
21
10
16
26
3
7
13
21
15
10
21
13
10
27
20
20
17
6
24
22
1
15
5
4
KEY 27 IS OPTIONAL
ON SINGLE COMPRESSION
2
10
25
21
25
10

DETAIL A

NOTE:
THIS DRAWING SHOULD ONLY BE REFERENCED
WHEN MOUNTING A SINGLE COMPRESSION UNIT

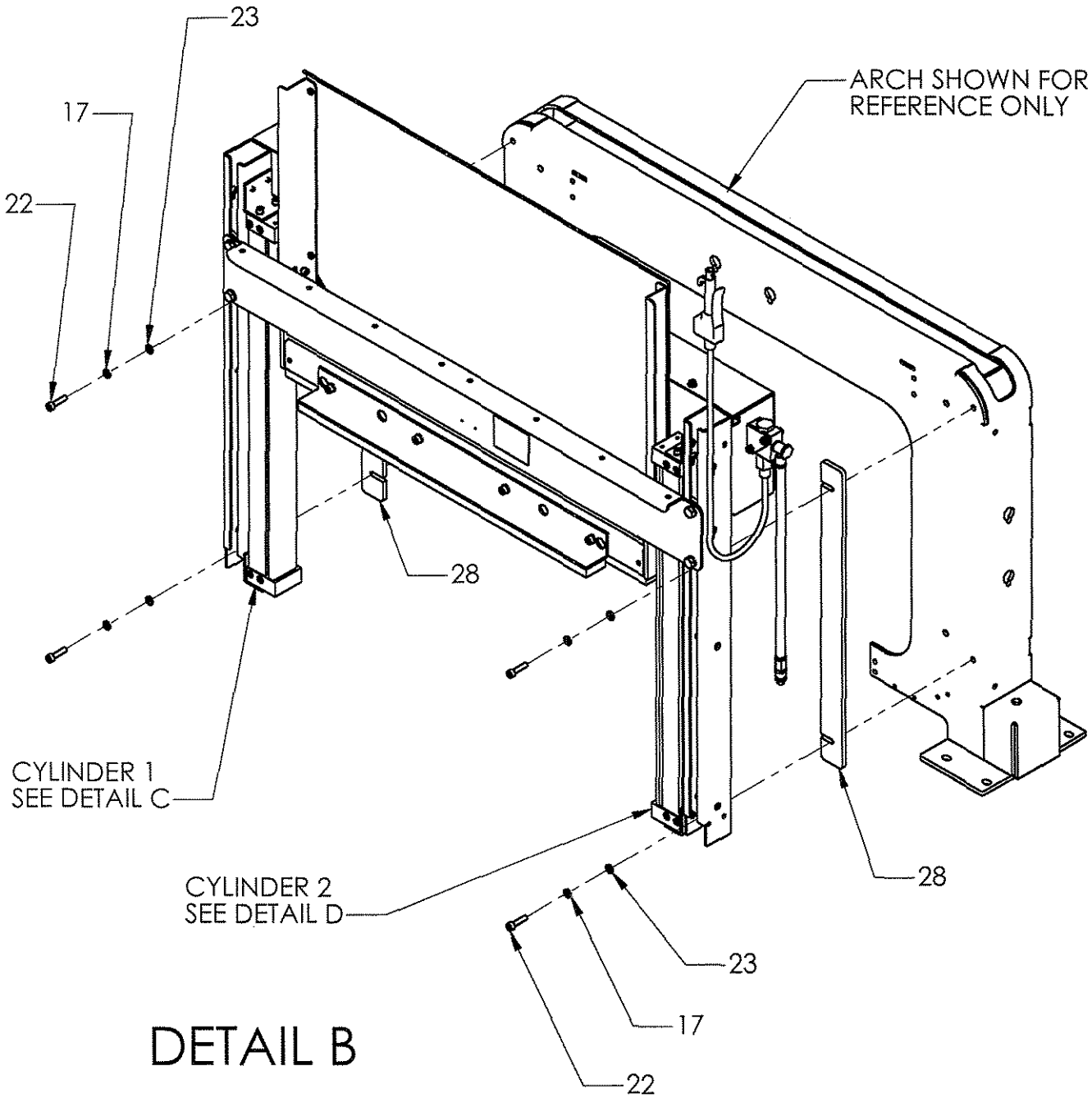

DETAIL B

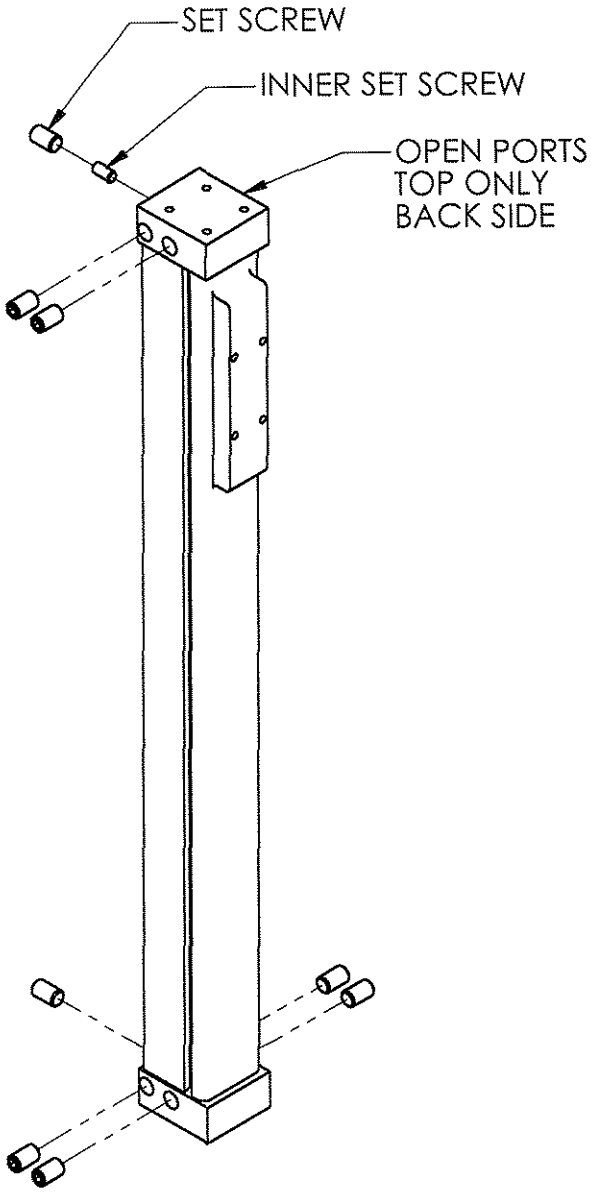

DETAIL C
(CYLINDER 1)
510168 15"
435228 20"
435229 30"

DETAIL D
(CYLINDER 2)
510167 15"
435256 20"
435257 30"

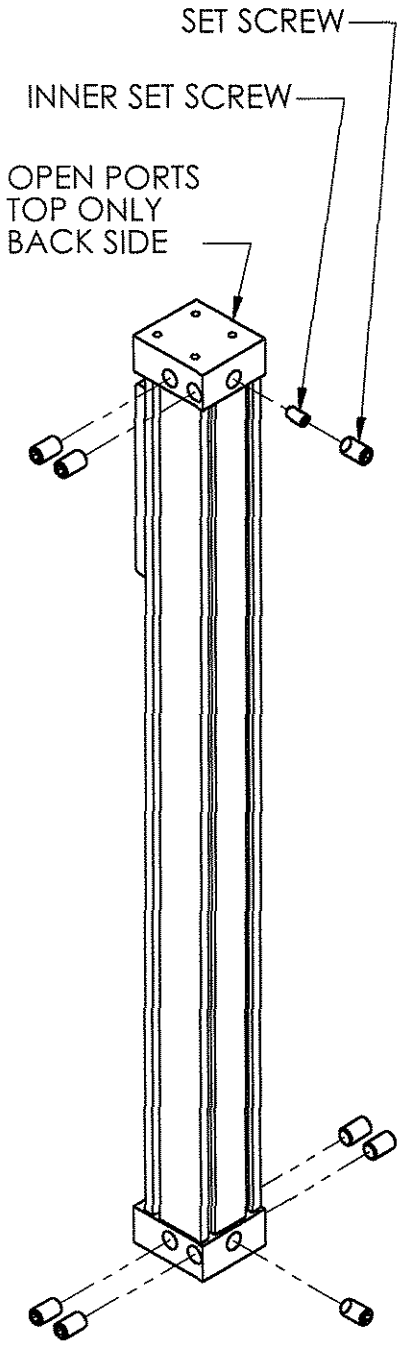

NOTE:
CYLINDER AS SHIPPED MAY NOT BE CONFIGURED FOR IMMEDIATE INSTALLATION. RECONFIGURE CYLINDER AS SHOWN BEFORE INSTALLING IN EITHER POSITION "1" OR "2" (DETAIL C OR DETAIL D)

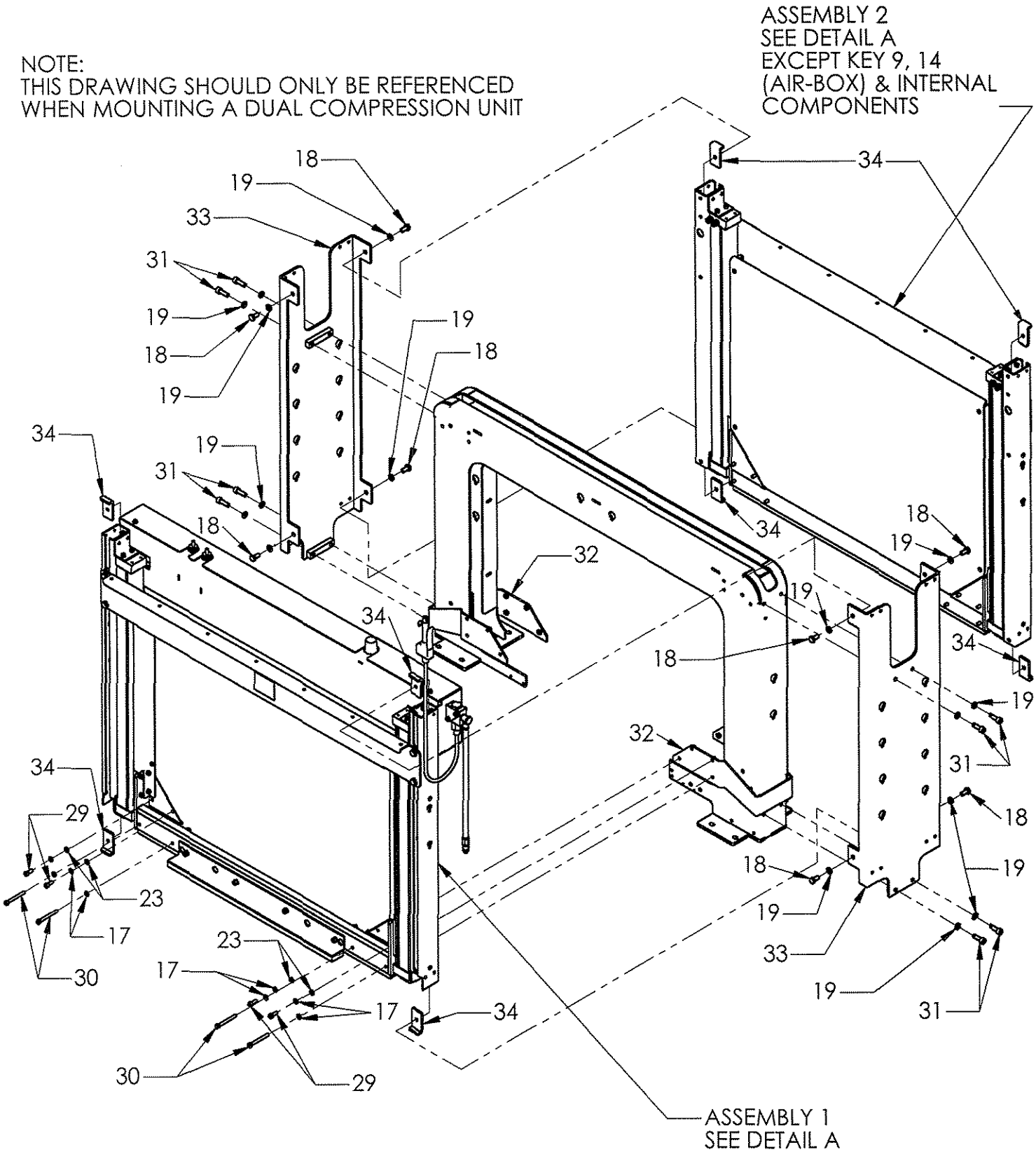
NOTE:
THIS DRAWING SHOULD ONLY BE REFERENCED
WHEN MOUNTING A DUAL COMPRESSION UNIT
ASSEMBLY 2
SEE DETAIL A
EXCEPT KEY 9, 14
(AIR-BOX) & INTERNAL
COMPONENTS
18
19
33
31
19
18
19
19
18
34
19
31
18
32
34
34
18
19
19
18
34
19
32
31
34
29
18
23
18
19
17
19
23
33
30
17
17
19
34
31
30
29
ASSEMBLY 1
SEE DETAIL A

DETAIL E

REFERENCE THIS BILL FOR AIR-BOX ID		SINGLE COMPRESSION						DUAL COMPRESS.	
CHUTE SIZE		20" X 15"		28" X 20"		33" X 30"		28" X 20"	
BILL OF MATERIALS		515042		438485		438486		515043	
KEY	DESCRIPTION	QTY.	PART #	QTY.	PART #	QTY.	PART #	QTY.	PART #
1	MOUNTING PLATE - SWITCH			1	435221			1	435221
2	BLOCK DISTRIBUTION			1	435244			1	435244
3	ADAPTER-1/4 BSPP TO 1/4 NPT			3	435253			3	435253
4	BLOW GUN COIL HOSE			1	435254			1	435254
5	PLUG 1/4" BSPP			1	435261			1	435261
6	BANJO-FEMALE			1	435272			1	435272
7	HOSE ASSEMBLY			1	435270			1	435270
8	ADAPTER 1/4 NPT			1	435273			1	435273
9	QUICK DISCONNECT, NPT DOMESTIC			1	435258			1	435258
9	QUICK DISCONNECT, NPT SCHRADER			REF	435252			REF	435252
9	QUICK DISCONNECT, BSPP EURO			REF	435262			REF	435262
10	REGULATOR R08-C2-FOGO-SIG.LIB			1	435247			1	435247
11	1/4 BSPP 4-WAY VALVE			1	435245			1	435245
12	1/4 NPT MUFFLER W/ FLOW CNTL.			2	435246			2	435246
13	PLUG, 22mm			1	434830			N/A	
14	SELECTOR, SWITCH 2 POS.			1	436236			1	436236
15	M5 X 30 SHCS (ZINC)			2	421652			2	421652
16	M5 LOCKWASHER (ZINC)			4	010076			2	010076
17	M5 X 12 SHCS (FLANGED ZINC)			4	272418			4	272418
18	10mm X 1/4 BSPP (MALE)			3	435241			3	435241
19	1/8 BSPP - 8mm TUBING, STRAIGHT			4	435263			4	435263
20	FILTER F-08-C2-SK00			1	435248			1	435248
21	JOINER GPA-96-738			1	435249			1	435249
22	MOUNTING BASE			1	436229			1	436229
23	M6 X 40 SHCS (ZINC)			2	162406			2	162406
24	M6 LOCKWASHER (ZINC)			2	481889			2	481889
25	10mm TEE			2	435243			2	435243
26	M5 X 12 SHCS (ZINC)			2	010028			N/A	
27	INFO SIGN, CLAMP PRESSURE			1	435807			1	435807
28	LEGEND PLATE			1	434368			1	434368
29	INFO SIGN, CYL. CONTROL			1	434369			1	434369
30	STUB MANIFOLD			1	421629			1	421629
31	UNION 10mm TUBING			4	435267			N/A	
32	REDUCER, 10mm-8mm			4	435266			N/A	
33	10mm TUBING			A/R	435250			A/R	435250
34	8mm TUBING			A/R	435264			A/R	435264
35	WIRE HARNESS			1	435463			1	435463
36	1/4 BSPP 10mm SWIVEL			3	435240			3	435240
37	CONTACT BLOCK 1 N.O.			1	436231			1	436231
38	PLUG, 38mm				N/A			1	435260
39	MALE-Y, 8mm TUBING				N/A			4	435268
40	FEMALE CONNECTOR, 10mm TUBING				N/A			4	435269
41	WEAR STRIP				N/A			A/R	435279

AIR-BOX NOTE:
THIS EXPLODED VIEW SHOULD ONLY BE USED IN REFERENCE TO SINGLE COMPRESSION UNITS

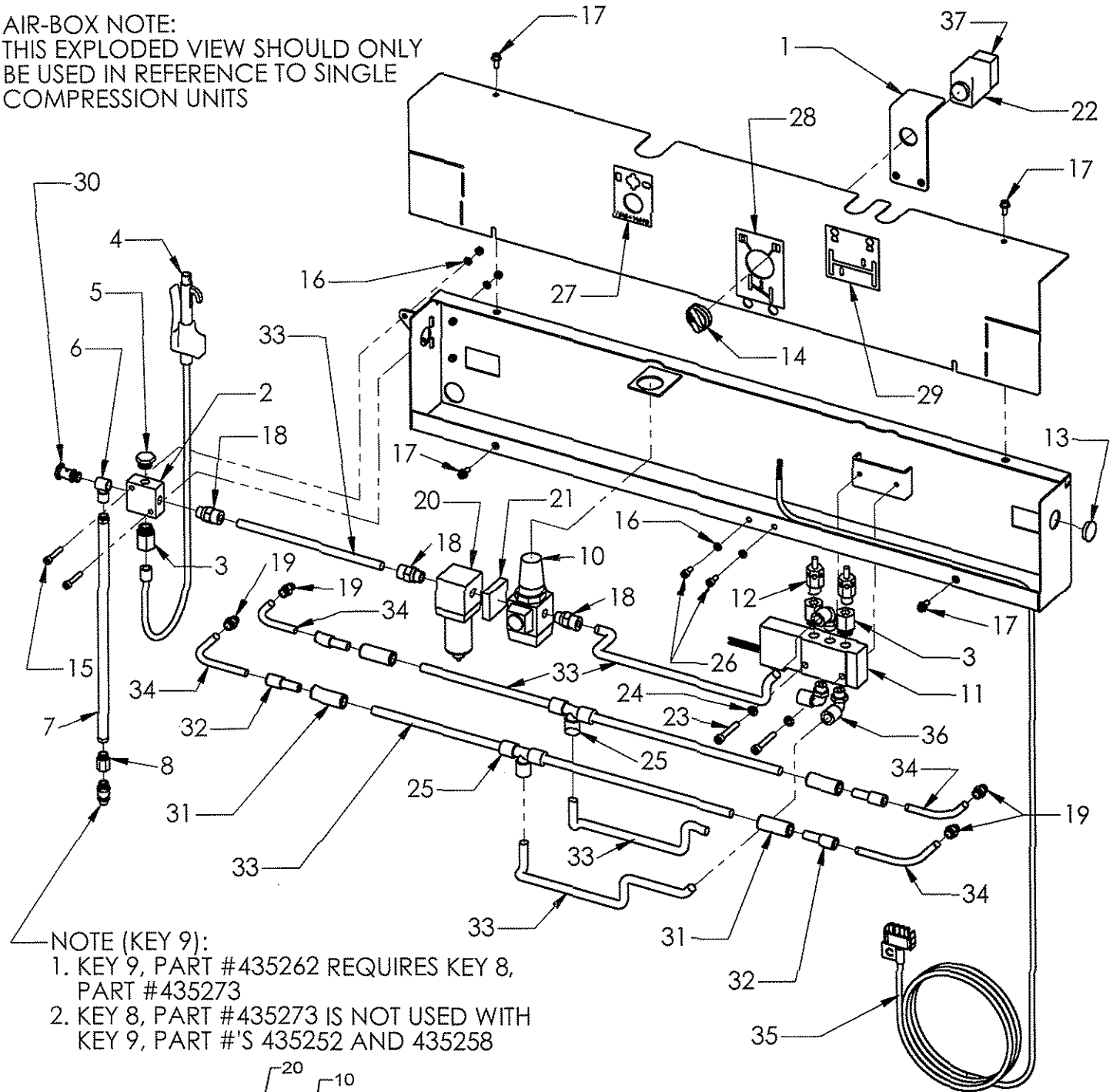

NOTE (KEY 9):
1. KEY 9, PART #435262 REQUIRES KEY 8, PART #435273
2. KEY 8, PART #435273 IS NOT USED WITH KEY 9, PART #'S 435252 AND 435258

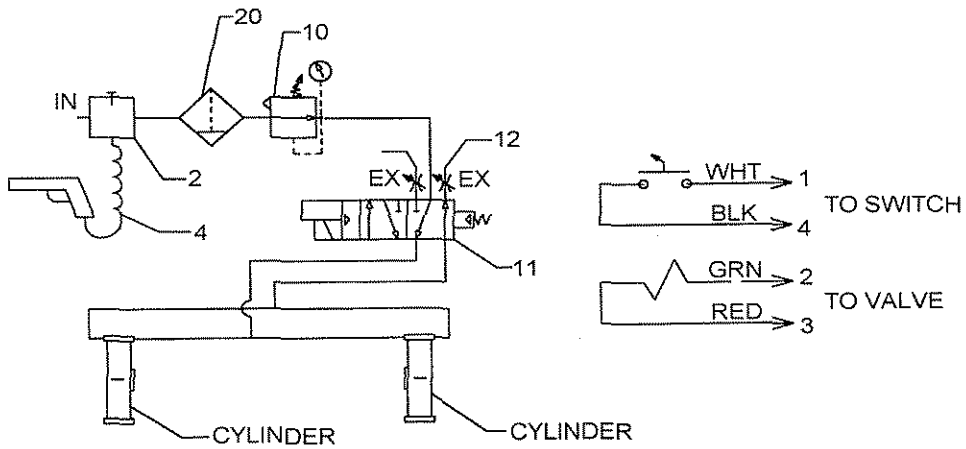

COMPRESSION OPTION

515041-3

AIR-BOX NOTE:
THIS EXPLODED VIEW SHOULD ONLY BE USED IN REFERENCE TO DUAL COMPRESSION UNITS

REMOVE TAB FROM COVER ONLY ON DUAL COMPRESS. (BOTH SIDES) INSTALL KEY 41, WEAR STRIP

NOTE (KEY 9):
1. KEY 9, PART #435262 REQUIRES KEY 8, PART #435273
2. KEY 8, PART #435273 IS NOT USED WITH KEY 9, PART #'S 435252 AND 435258

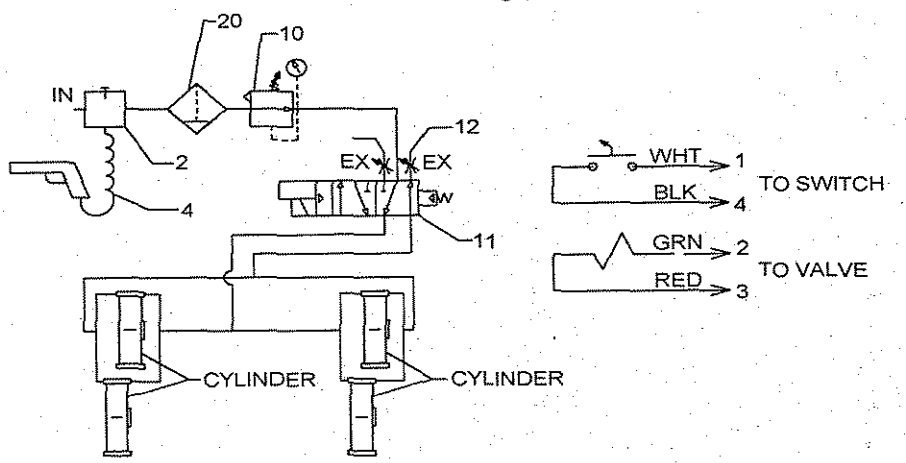

48 X 20 COMPRESSION ASSEMBLY 516183-6

COMPRESSION		60Hz MACHINES		50Hz MACHINES	
BILL OF MATERIAL		516184		516185	
KEY	DESCRIPTION	QTY.	PART NO.	QTY.	PART NO.
1	M8 LOCKWASHER (ZINC)	6	280807	6	280807
2	M8 X 20 SBHCS	4	010051	4	010051
3	M5 LOCKWASHER (ZINC)	5	010076	5	010076
4	M6 LOCKWASHER (ZINC)	15	481889	15	481889
5	PIVOT BRACKET	2	516110	2	516110
6	GEAR RACK	4	435762	4	435762
7	CAMOZZI 1/4 BSPP 10 MM SWIVEL	1	435240	1	435240
8	GUIDE SPACER	4	516088	4	516088
9	OUTER GUIDE, RIGHT	1	516086	1	516086
10	INNER GUIDE, RIGHT	1	516085	1	516085
11	INNER GUIDE, LEFT	1	516084	1	516084
12	OUTER GUIDE, LEFT	1	516087	1	516087
13	RACK HOLDER	2	516083	2	516083
14	AIR CYLINDER	1	516131	1	516131
15	ROD END	1	516113	1	516113
16	M8 X 75 SHCS	4	165434	4	165434
17	M8 LOCKWASHER (ZINC)	10	280857	14	280857
18	SHEILD SUPPORT	1	516066	1	516066
19	SHEILD BRACE	1	516179	1	516179
20	CYLINDER SPACER	2	516073	2	516073
21	M8 X 20 SFHCS	2	010050	2	010050
22	CLEVIS PIN	1	516114	1	516114
23	M8 X 20 SHCS (ZINC)	2	160331	2	160331
24	M6 X 16 SFHCS (ZINC)	6	433922	6	433922
25	COMPRESSION LINK	1	516065	1	516065
26	M5 X 12 SFHCS	6	437290	6	437290
27	COMPRESSION SHEILD	1	516180	1	516180
28	RACK COVER	1	516093	1	516093
29	M5 X 16 SBHCS (ZINC)	5	435537	5	435537
30	M6 X 12 SHCS (ZINC)	7	433919	7	433919
31	BUMPER BRACKET	N/R	N/R	1	516162
32	NUT PLATE	1	516181	1	516181
33	BUMPER	2	516125	2	516125
34	M8 X 16 SHCS	4	162395	8	162395
35	1/2-13 X 3-1/2 HHCS	1	517905	1	517905
36	7/16-20 HEX LOCKNUT	1	009185	1	009185
37	1/2-13 HEX NUT	1	432154	1	432154
38	5/16-18 HEX LOCKNUT	2	072132	2	072132
39	M8 HEX LOCKNUT	1	433068	1	433068
40	CAMOZZI 1/4 BSPP 8 MM SWIVEL	1	510230	1	510230
41	SLIDE BLOCK	1	516079	1	516079
42	M8 FENDER WASHER (ZINC)	1	420322	1	420322
43	M8 X 35 SBHCS	1	278037	1	278037
N/S	COMPRESSION SLOT COVER	-2	516118	-2	516118

48 X 20 COMPRESSION ASSEMBLY

516183-6

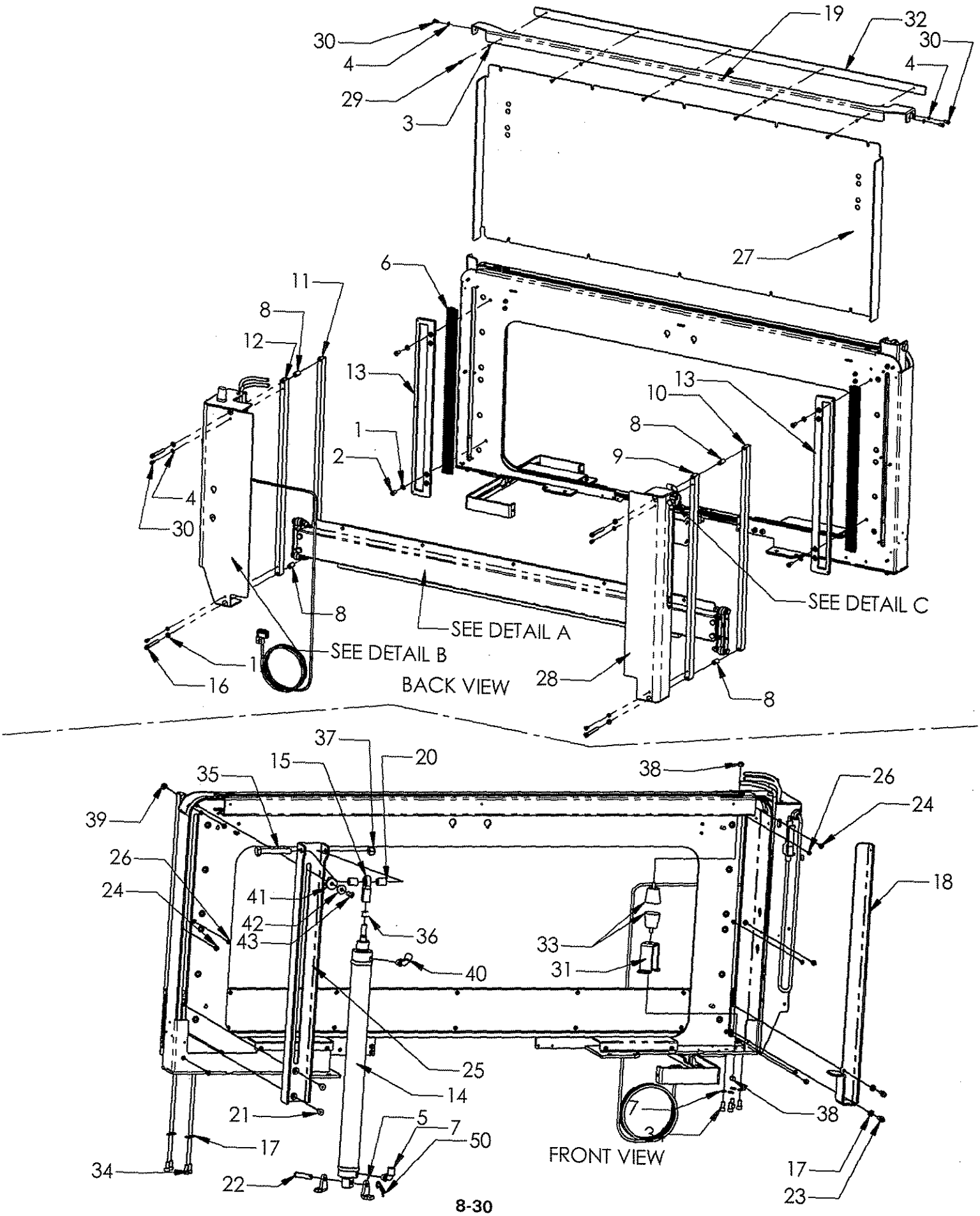

48 X 20 COMPRESSION ASSEMBLY
COMPRESSION BAR

516183-6

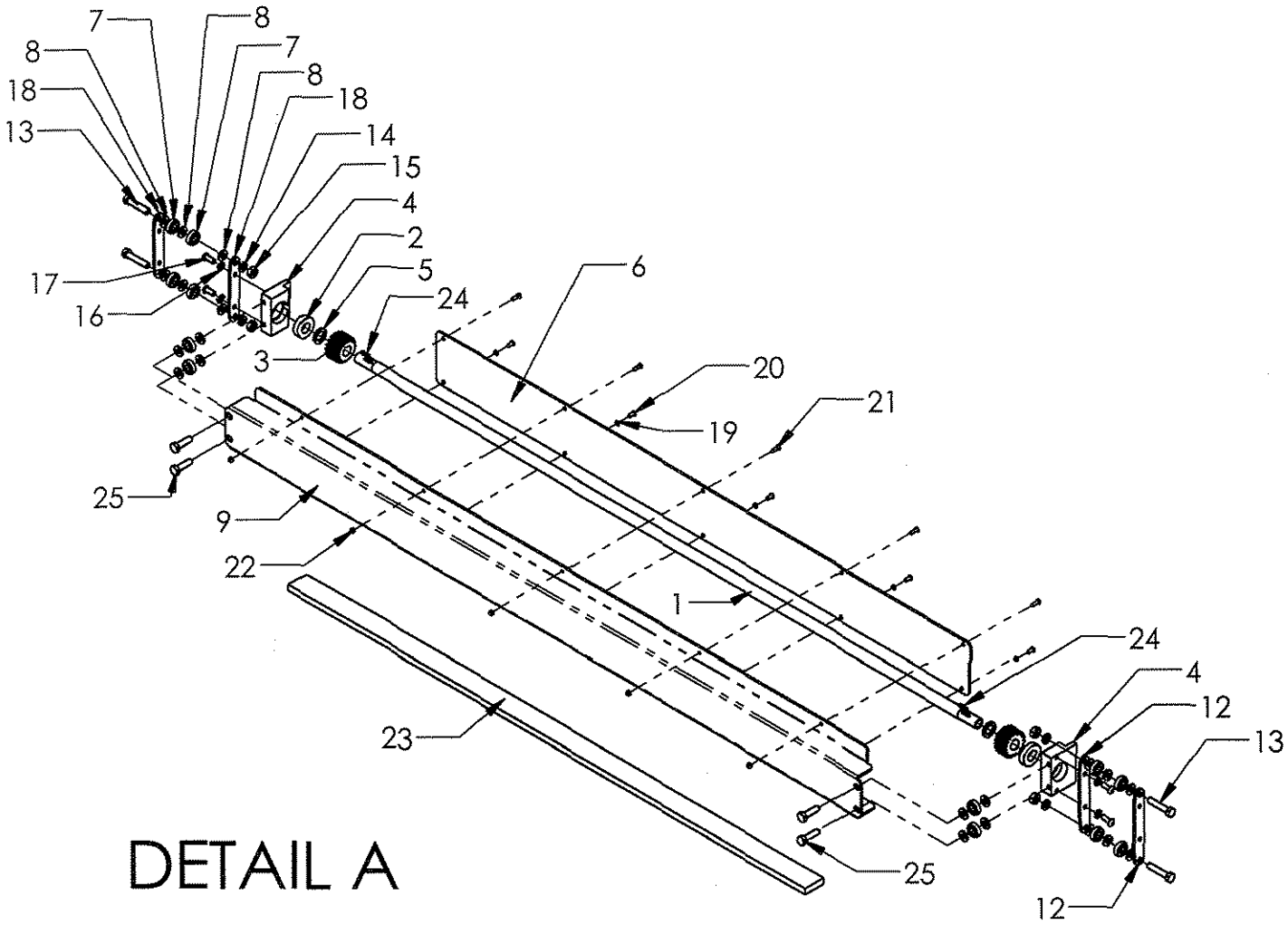

48 X 20 COMPRESSION ASSEMBLY
COMPRESSION BAR

516183-6

COMPRESSION		60Hz MACHINES		50Hz MACHINES	
BILL OF MATERIAL		516184		516185	
KEY	DESCRIPTION	QTY.	PART NO.	QTY.	PART NO.
1	TORSION TUBE	1	516177	1	516177
2	BALL BEARING	2	435100	2	435100
3	SUN GEAR	2	281992	2	281992
4	BEARING BLOCK	2	516082	2	516082
5	GEAR SPACER	2	516112	2	516112
6	COMPRESSION BAR COVER	1	516178	1	516178
7	BALL BEARING	12	434655	12	434655
8	M10 FLATWASHER (ZINC)	20	251267	20	251267
9	REAR COMPRESSION BAR	1	516176	1	516176
12	BEARING MOUNT, RIGHT	2	516090	2	516090
13	M10 X 50 HHCS (ZINC)	4	438303	4	438303
14	M10 LOCKWASHER (ZINC)	4	010078	4	010078
15	M10 HEX NUT (ZINC)	4	164962	4	164962
16	M8 LOCKWASHER (ZINC)	4	162381	4	162381
17	M8 X 20 SBHCS	4	010051	4	010051
18	BEARING MOUNT, LEFT	2	516091	2	516091
19	M5 LOCKWASHER (ZINC)	5	010076	5	010076
20	M5 X 12 SBHCS (ZINC)	5	175914	5	175914
21	M5 X 16 SBHCS (ZINC)	5	435537	5	435537
22	M5 HEX LOCKNUT	5	266059	5	266059
23	COMPRESSION BAR PAD	1	435770	1	435770
24	SQUARE KEY	2	435213	2	435213
25	M10 HHCS (ZINC)	4	278997	4	278997

48 X 20 COMPRESSION ASSEMBLY
AIR BOX

516183-6

COMPRESSION		60Hz MACHINES		50Hz MACHINES	
BILL OF MATERIAL		516184		516185	
KEY	DESCRIPTION	QTY.	PART NO.	QTY.	PART NO.
1	1/4 BSPP 4-WAY VALVE	1	435245	1	435245
2	SELECTOR, SWITCH 2 POSITION	1	436236	1	436236
3	CAMOZZI 1/4 BSPP 10 MM SWIVEL	4	435240	4	435240
4	MOUNTING BASE	1	436229	1	436229
5	M6 X 40 SBHCS	2	516167	2	516167
6	M6 LOCKWASHER (ZINC)	2	481889	2	481889
7	COMPRESSION FORCE LABEL	1	516130	1	516130
8	COMPRESSION LABEL	1	516129	1	516129
9	WIRE HARNESS	1	435463	1	435463
10	AIR VALVE MOUNT	1	516092	1	516092
11	FILTER/ PRESSURE REGULATOR	1	516133	1	516133
12	M6 HEX NUT (ZINC)	2	005465	2	005465
13	ADAPTER - 1/4 BSPP TO 1/4 NPT	1	435253	1	435253
14	BLOCK DISTRIBUTION	1	435244	1	435244
15	BLOW GUN COIL HOSE	1	435254	1	435254
16	PLUG 1/4" BSPP	2	435261	2	435261
17	M5 X 30 SHCS (ZINC)	2	421652	2	421652
18	M5 LOCKWASHER (ZINC)	2	010076	2	010076
19	M5 HEX NUT (ZINC)	2	169440	2	169440
20	10MM TEE	1	435243	1	435243
21	FITTING 1/4 BSP TO 8MM ELBOW	1	510230	1	510230
22	1/4 NPT MUFFLER	2	435108	2	435108
23	FLOW CONTROL VALVE	1	516132	1	516132
24	10MM X 1/4 BSPP (MALE)	3	435241	3	435241
25	10MM TUBING	A/R	435250	A/R	435250
26	8MM TUBING	A/R	435264	A/R	435264

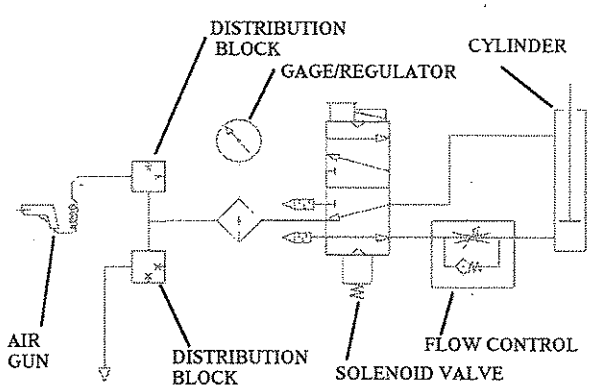

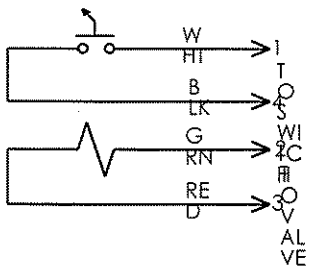

48 X 20 COMPRESSION ASSEMBLY
AIR BOX

516183-6

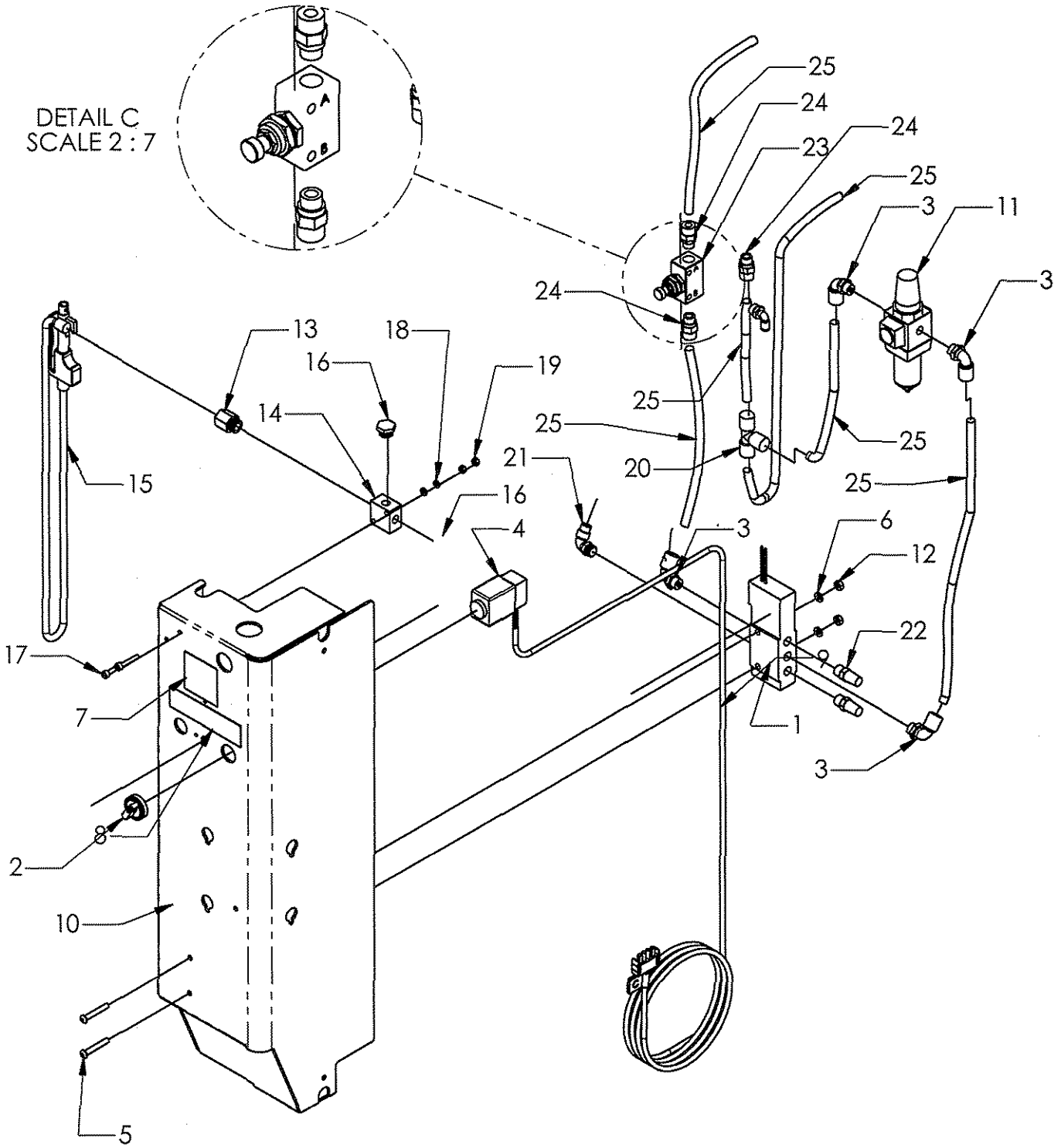

DETAIL B

48 X 20 COMPRESSION ASSEMBLY
AIR INLET

516183-6

COMPRESSION		60Hz MACHINES		50Hz MACHINES	
BILL OF MATERIAL		516184		516185	
KEY	DESCRIPTION	QTY.	PART NO.	QTY.	PART NO.
1	BLOCK DISTRIBUTION	1	435244	1	435244
2	PLUG 1/4" BSPP	2	435261	2	435261
3	BANJO-FEMALE	1	435272	1	435272
4	HOSE ASSY.	1	435270	1	435270
5	ADAPTER 1/4 NPT	1	435273	1	435273
6	QUICK DISCONNECT, NPT	1	435258	1	435258
7	M5 X 30 SHCS (ZINC)	2	421652	2	421652
8	M5 LOCKWASHER (ZINC)	2	010076	2	010076
9	M5 HEX NUT (ZINC)	2	169440	2	169440
10	STUB MANIFOLD	1	421629	1	421629
11	1/4 BSPP 10MM SWIVEL	1	435240	1	435240

48 X 20 COMPRESSION ASSEMBLY
AIR INLET

516183-6

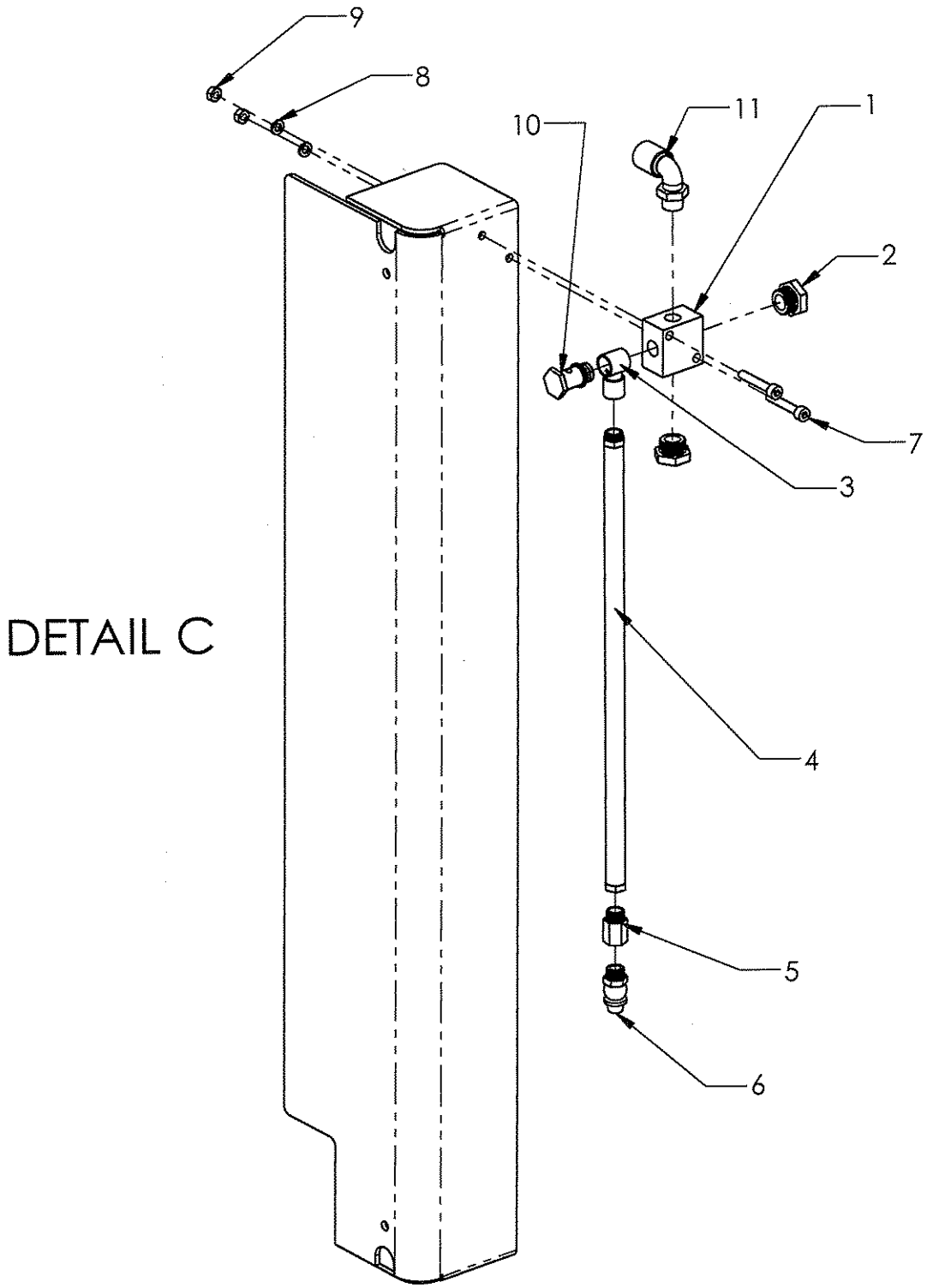

PHARMA MACHINE OPTION

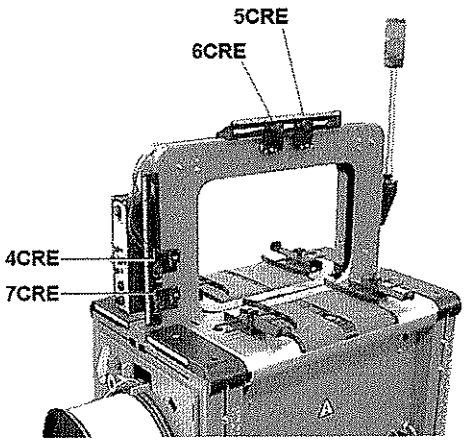

Description of operation:

This feature enables the machine to look for lids on two different height totes. The check lid photo-eye (7CRE) determines when the package height photo-eye (4CRE) and lid detection photo-eyes (5CRE & 6CRE) are checked to determine whether or not a strap is required. When the check lid photo-eye (7CRE) is initially blocked, the tote height and lid detection photo-eyes will determine if a strapping cycle is required or not for the tote.

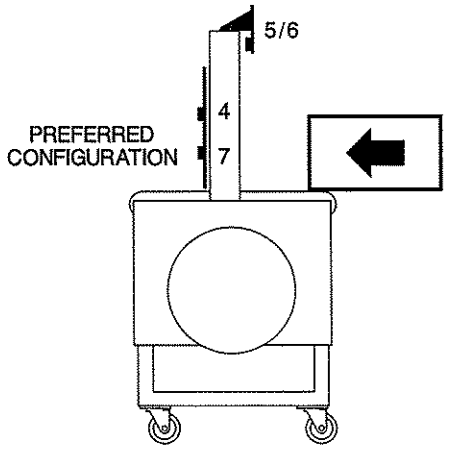

1. **The machine must be in Automatic mode for the pharma option to function.**
2. **High totes that block the Package Height photo-eye 4CRE:**
   A. **Will be strapped if the "High" photo-eye 5CRE is also blocked (lid present).**
   B. **Will not be strapped if the "High" photo-eye 5CRE is not blocked (lid not present).**
3. **Low totes that do not block the Package Height photo-eye 4CRE:**
   A. **Will be strapped if the "Low" photo-eye 6CRE is blocked (lid present).**
   B. **Will not be strapped if the "Low" photo-eye 6CRE is not blocked (lid not present).**
4. **Packages that meet the strapping criteria above, will be strapped per the automatic strapping mode selected on the operator control pendant.**

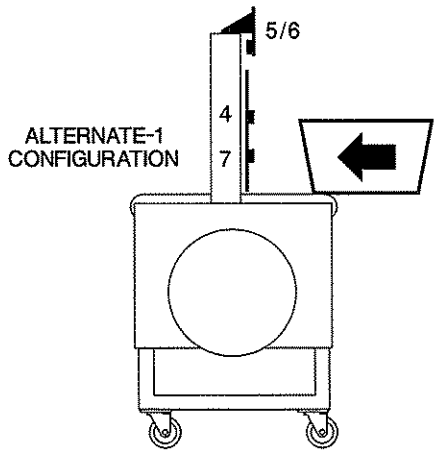

Note: If the photo-eyes determine that a strap cycle is required and the optional Package Stop (515697) is installed (and turned on) the package stop will raise to hold the tote's position for more accurate strap placement.

Basic Installation & Set Up:

1. **Mount the lid detection and height detection assemblies to the machine's chute as shown in this manual.**
2. **Set photo-eyes 5CRE and 6CRE to the center of the arch.**
3. **Set the range on the "Low" photo-eye 6CRE to just "see" the lid on the low tote and no further.**
4. **Set the range on the "High" photo-eye 5CRE to just "see" the lid on the high tote and no further.**
5. **Set the package height photo-eye 4CRE to just above the low tote (the eye should not detect the low tote.)**
6. **Set the check lid detection photo-eye 7CRE as low as possible to the conveyor.**

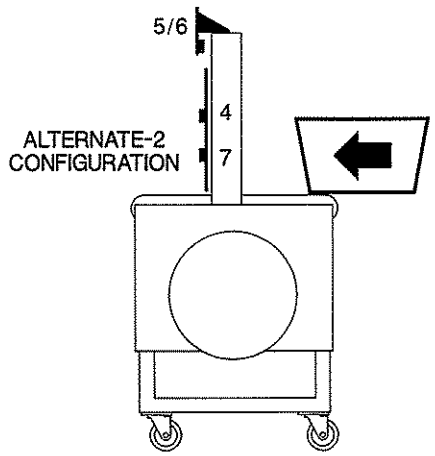

Note: The lid detection assembly preferred mounted is on the entry side of the chute. It may be alternately mounted on the exit side only if the package height photo-eye assembly is also mounted on the exit side. If both assemblies are mounted on the same side, the lid detection photo-eyes must be over the lid area of the tote and not the side of the tote when the check lid photo-eye (7CRE) is initially blocked.

PACKAGE HEIGHT PHOT0 EYE LID DETECTION

515825-4

ITEM NO.	QTY.	PART NO.	DESCRIPTION
1	1	515667	PHOTO EYE MOUNTING BRACKET
2	2	515668	PHOTO EYE PLATE
3	4	434670	Ø10 X 16 ROLL PIN
4	2	515669	CLAMP
5	1	515671	LABEL, PACKAGE HEIGHT
6	2	515670	KNOB WITH FLUTED RIM
7	2	515988	PHOTOELECTRIC SENSOR
8	4	262617	M6 FLATWASHER (ZINC)
9	4	481889	M6 LOCKWASHER (ZINC)
10	4	515732	M6 X 12 THREAD FORMING SCREW
12	1	515849-7	LABEL 7CRE
13	1	515849-4	LABEL 4CRE
14	4	434740	M3 X 20 HEX HEAD
15	4	174364	M3 HEX NUT (ZINC)
16	1	515994	MIRROR BRACKET - PACKAGE HEIGHT
17	1.4'	292217	REFLECTIVE TAPE

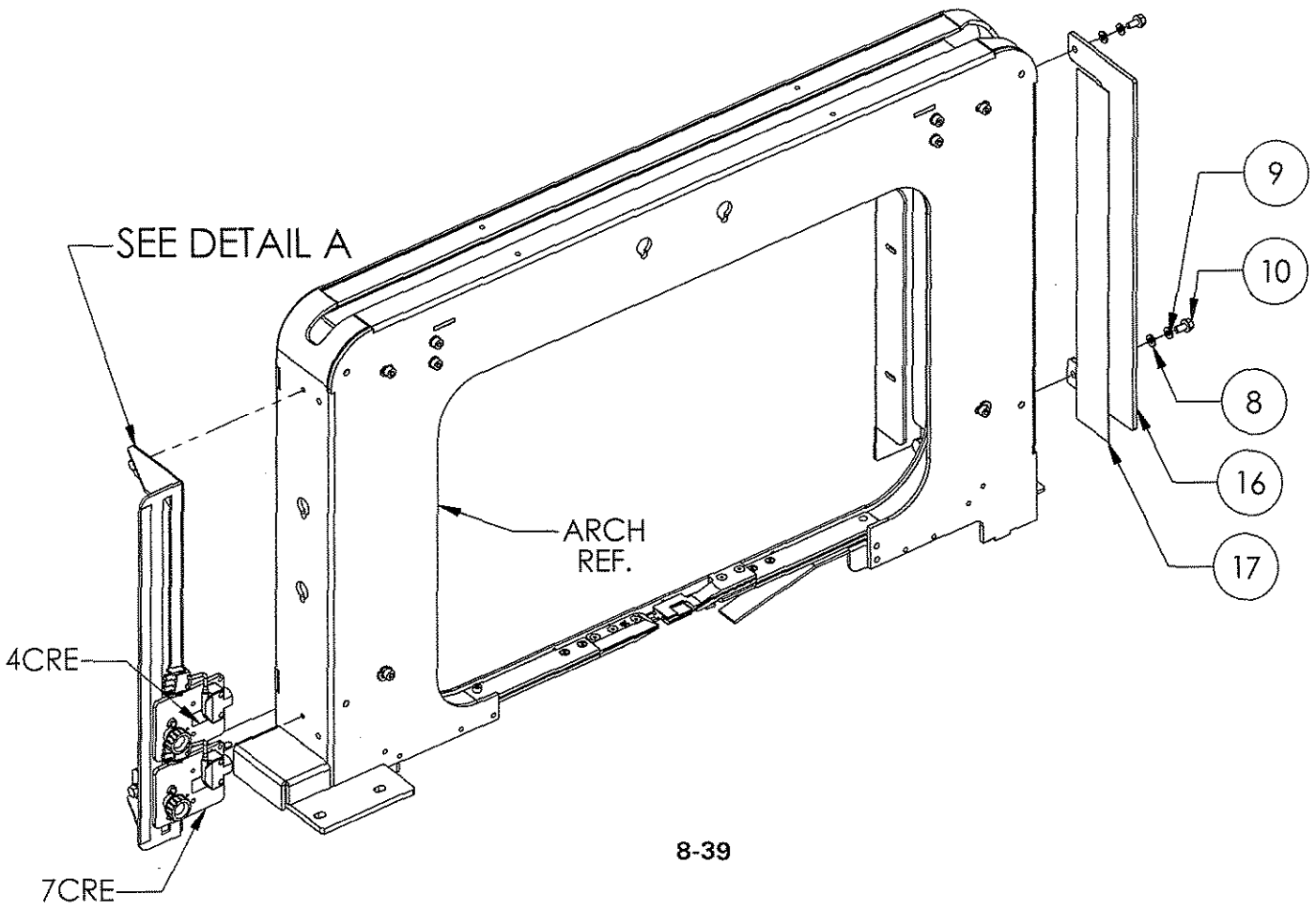

PACKAGE HEIGHT PHOT0 EYE
LID DETECTION

515825-4

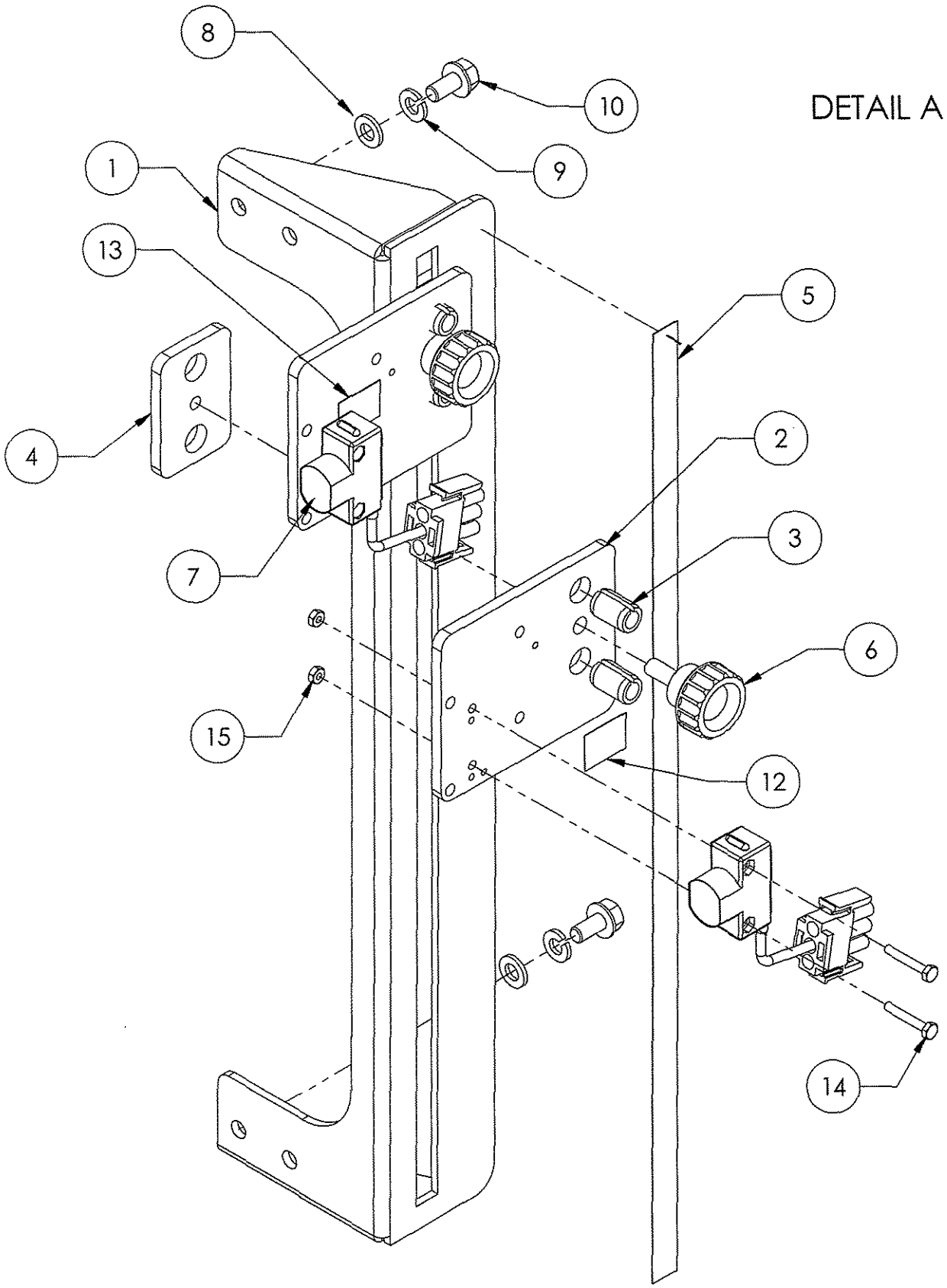

LID DETECTION ASSEMBLY

515816-2

ITEM NO.	QTY.	PART NO.	DESCRIPTION
1	1	515667	PHOTO EYE MOUNTING BRACKET
2	2	515668	PHOTO EYE PLATE
3	4	434670	Ø10 X 16 ROLL PIN
4	2	515669	CLAMP
5	1	515671	LABEL, PACKAGE HEIGHT
6	2	515670	KNOB WITH FLUTED RIM
7	2	515566	PHOTOELECTRIC SENSOR
8	2	262617	M6 FLATWASHER (ZINC)
9	2	481889	M6 LOCKWASHER (ZINC)
10	2	515732	M6 X 12 THREAD FORMING SCREW
11	4	432412	M4 X 16 SBHCS
12	N/S	515825	PACKAGE HEIGHT PHOTO EYE
13	1	515849-5	LABEL (HIGH TOTE) 5CRE
14	1	515849-6	LABEL (LOW TOTE) 6CRE
15	4	433115	SHCS M4x25 (GLV)
16	4	164966	NUT M4 (WU-ZINC)

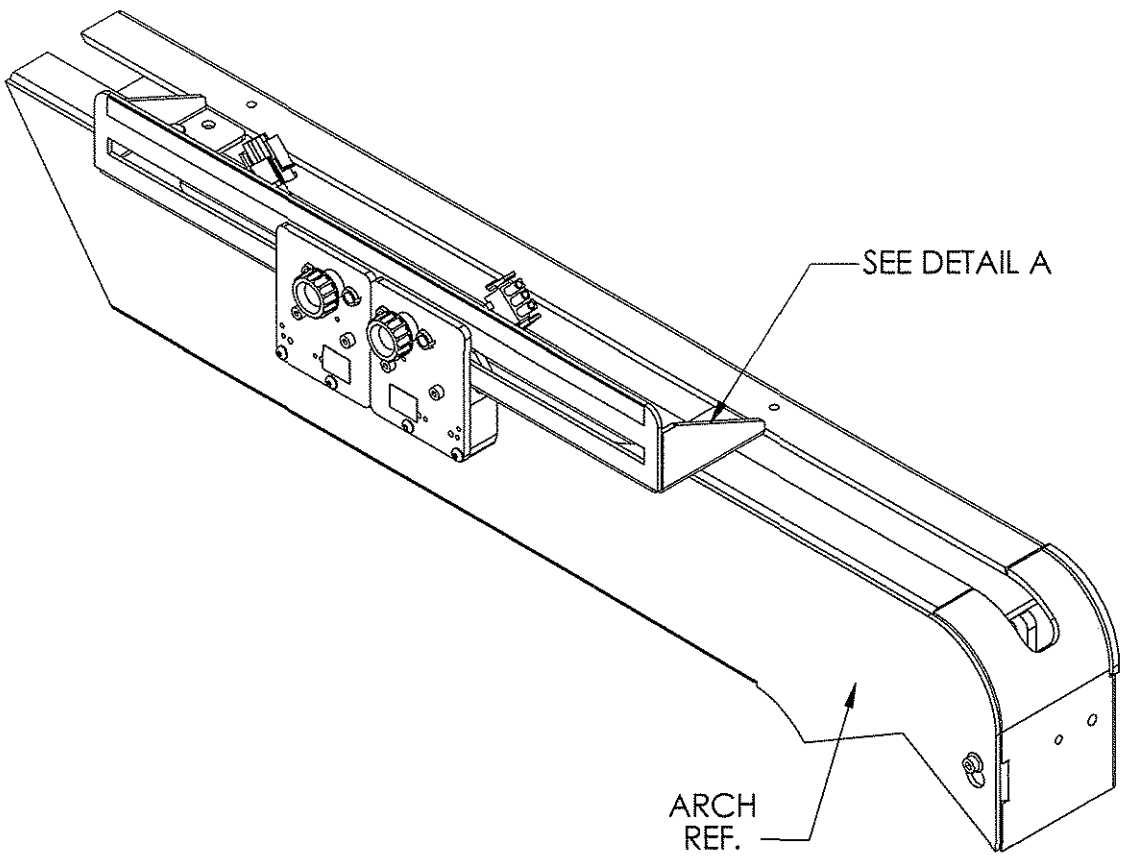

LID DETECTION ASSEMBLY

515816-2

DETAIL A

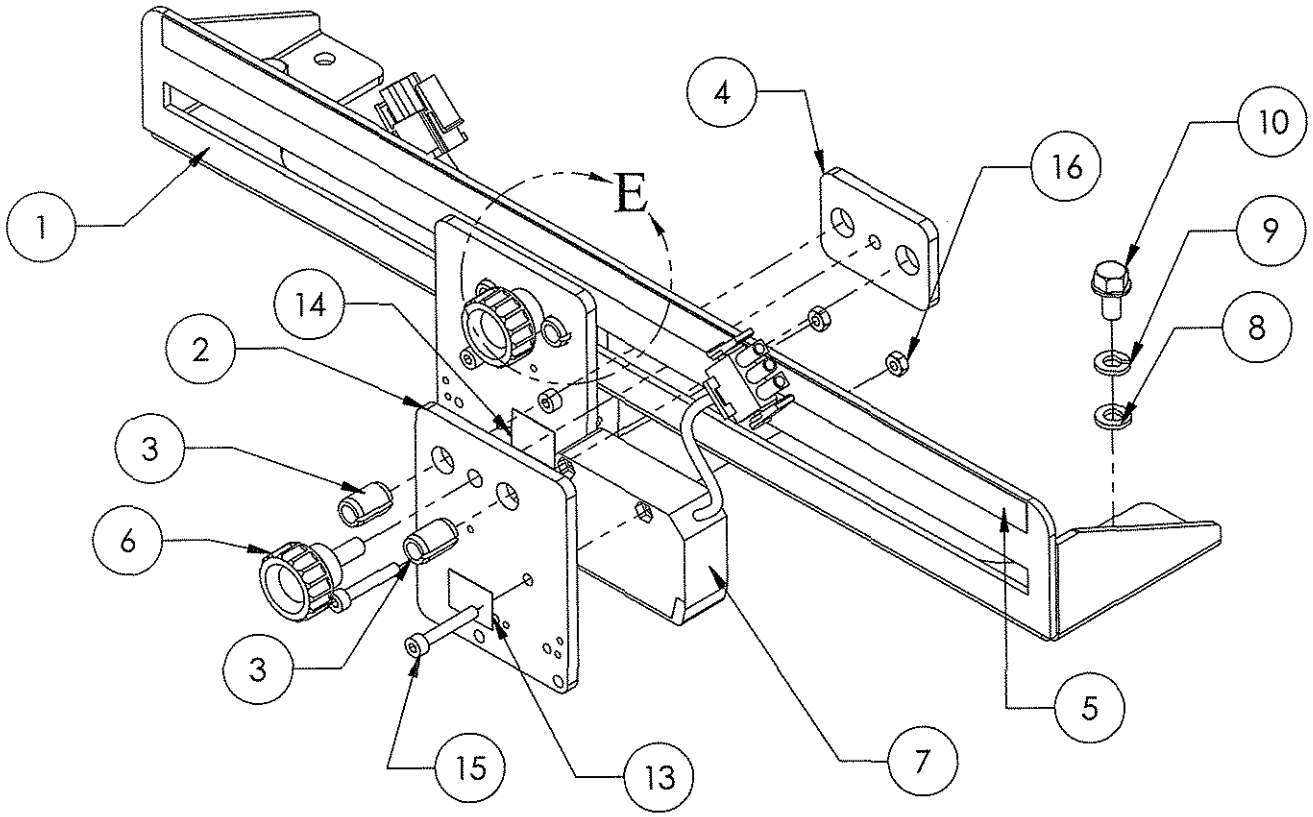

DETAIL E

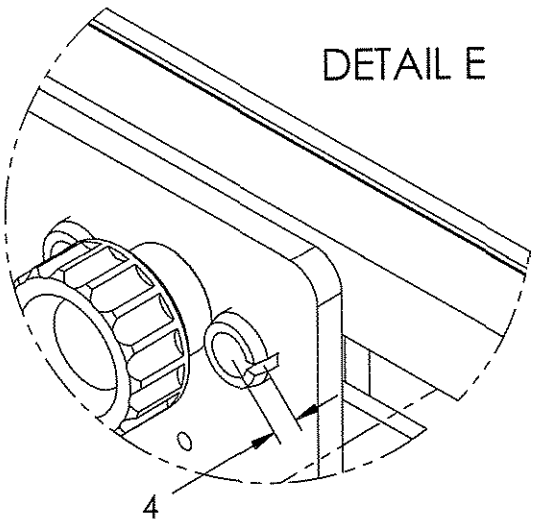

KEY	DESCRIPTION	PHARMA	
		QTY.	PART #
1	M5 X 16 SFHCS (ZINC)	REF	280279
2	M5 LOCKWASHER (ZINC)	REF	010076
3	M5 X 16 SHCS (ZINC)	REF	011214
4	INTERLOCK SWITCH ACTUATOR	REF	438752
5	M5 FLATWASHER (ZINC)	REF	171571
6	M5 HEX NUT (ZINC)	REF	169440
7	M6 LOCKWASHER (ZINC)	REF	481889
8	ENTRY CONVEYOR TABLE-TOP WELD.	REF	515559
9	EXIT CONVEYOR TABLE-TOP WELD.	REF	516875
10	TABLE-TOP FILLER (RH)	REF	515321
11	TABLE-TOP FILLER (LH)	REF	515322
12	M6 X 10 SHCS	REF	281015
13	M8 X 30 HHCS (ZINC)	REF	252266
14	M8 LOCKWASHER (ZINC)	REF	162381
15	M8 HEX NUT (ZINC)	REF	164953
16	THR. FORM SCREW 6-19 X 3/8"	REF	515190
17	TABLE-TOP SHIM	A/R	515254
18	BELT TENSION CAM	2	515522
19	MOTOR COVER	REF	516303
20	CONV MOTOR BRACKET	REF	519525

HOT KNIFE WIRE GUARD

ITEM NO.	QTY.	PART NO.	DESCRIPTION
1	1	515811	HOT KNIFE WIRE GUARD
2	2	515861	GROMMET 3/8"x5/8"x1/8"
3	1	281532	M5 X 10 SHCS (ZINC)
4	1	010076	M5 LOCK WASHER (ZINC)

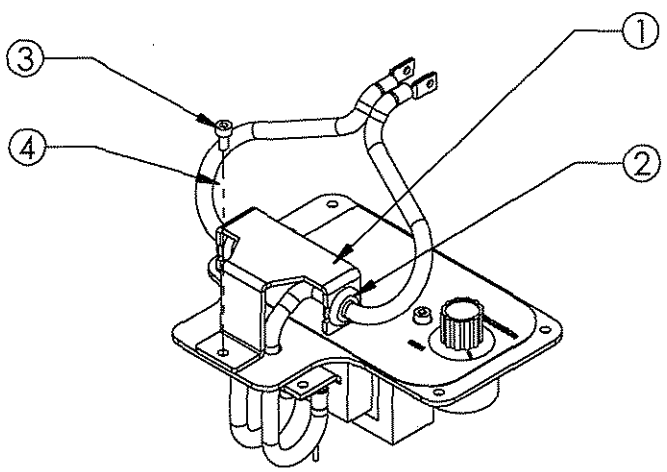

PHARMA PACKAGE STOP OPTION

515821-3

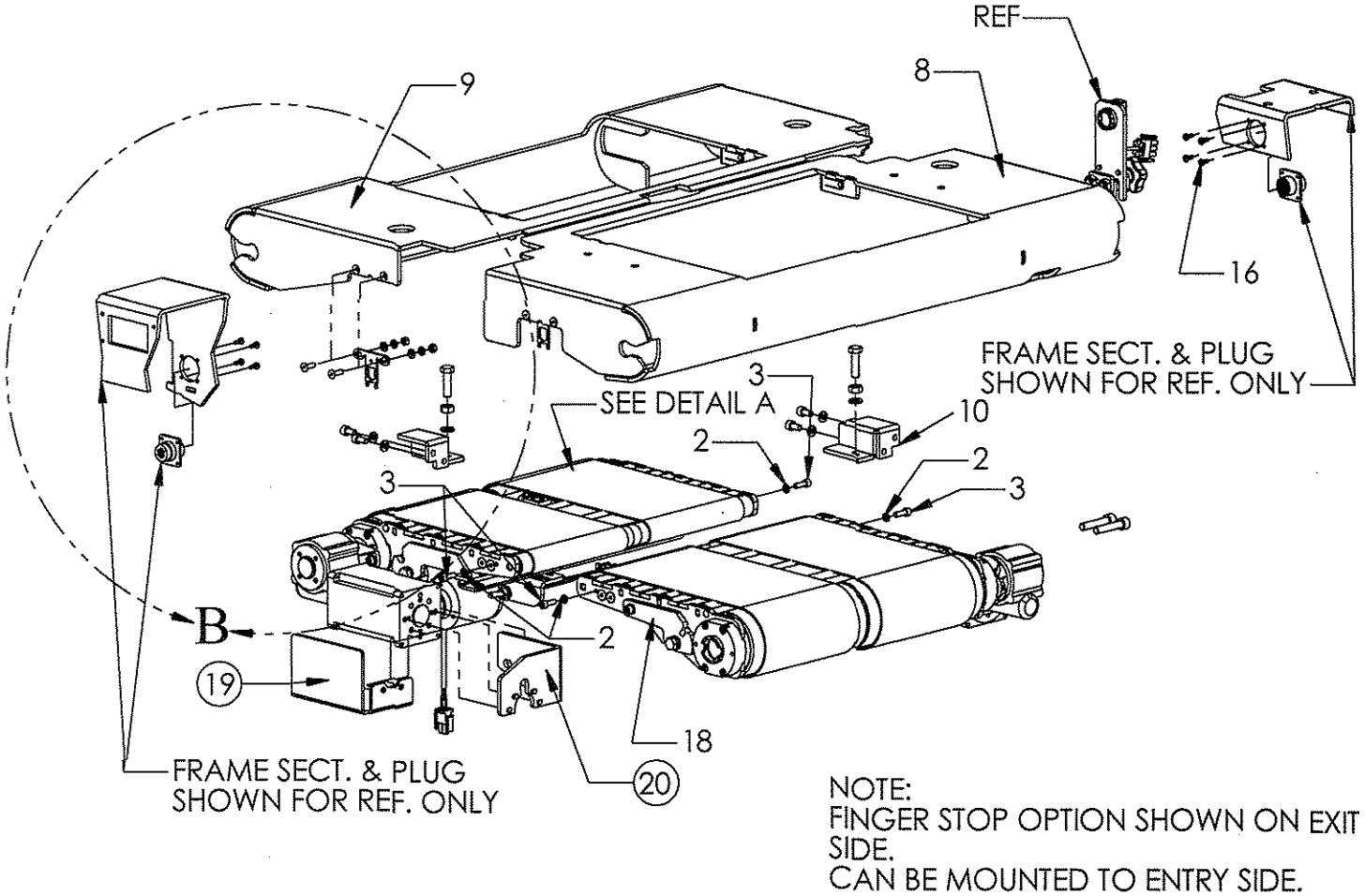

NOTE:
FINGER STOP OPTION SHOWN ON EXIT SIDE.
CAN BE MOUNTED TO ENTRY SIDE.

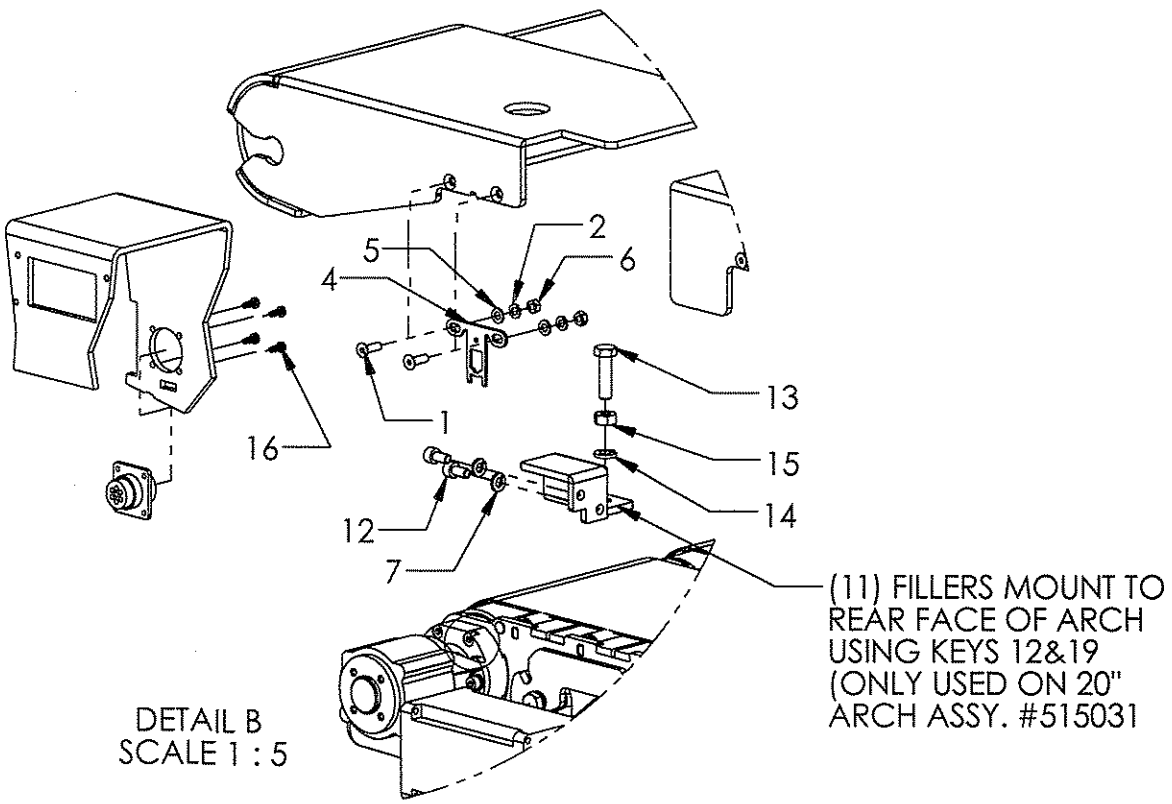

DETAIL B
SCALE 1 : 5

PHARMA PACKAGE STOP OPTION 515821-3

KEY	DESCRIPTION	20" ARCH PHARMA	
		QTY.	PART #
THESE ITEMS ARE REQUIRED FOR PHARMA CONVEYOR 515821			
1	SELF TRACKING BELT	2	515368
2	PACKAGE STOP ASSEMBLY	1	515697
3	M8x16 HHCS (GLV&WU)	2	172945
THESE ITEMS FROM STANDARD CONVEYOR XXXXXX ARE NOT REQUIRED			
	TENSION ROLLER SHAFT	-1	515495
	TENSION ROLLER TUBE	-1	515494
	BALL BEARING	-2	421210
	SPACER	-6	421294
	BELT TENSION CAM	-2	515522
	ROLLER TUBE	-1	515497
	ROLLER SHAFT	-1	515498
	BALL BEARING	-2	515499
	M6 FLSTWASHER (ZINC)	-2	262617
	FILLER PLATE	-1	515471
	SELF TRACKING BELT	-2	438460

WEARING PARTS ARE THOSE ITEMS WHICH ARE UNDERLINED

NOTE:
REFER TO SECTION 6 OF MANUAL FOR STANDARD CONVEYOR COMPONENTS

515821-3

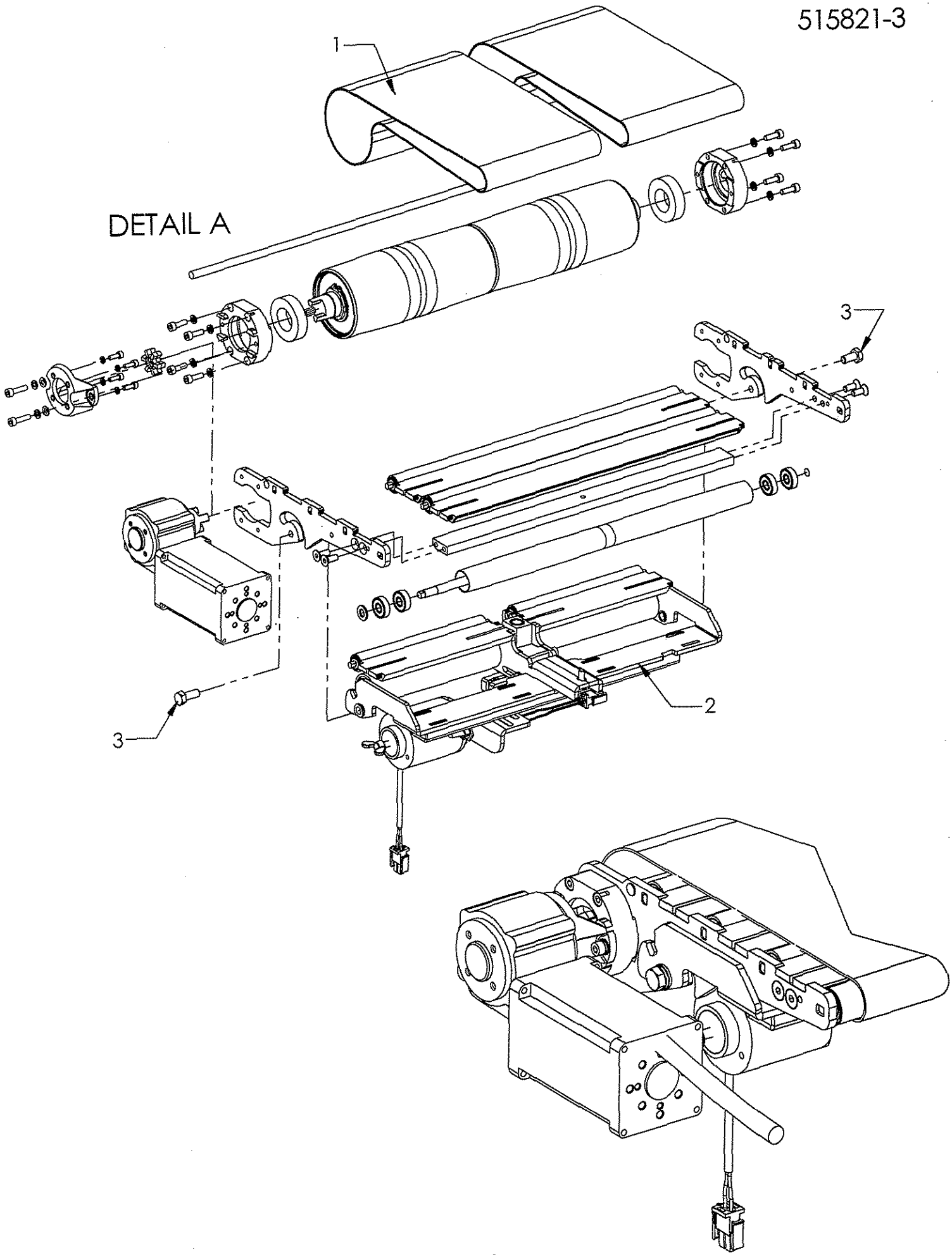

PACKAGE STOP ASSEMBLY

515697-2

ITEM NO.	QTY.	PART NO.	DESCRIPTION
1	1	515696	BELT TENSION CAM - ASSEMBLY
2	2	515681	TENSION ROLLER SHAFT
3	2	515680	TENSION ROLLER TUBE
4	4	421210	BALL BEARING
5	4	251267	FW (M10(GLV&WU-ZINC))
6	1	515686	PIN HOUSING
7	1	515690	DRY BEARING DIA.13
8	1	515691	DRY BEARING DIA.16
9	1	515687	STOP PIN
10	1	515693	COMPRESSION SPRING
11	1	515688	LEVER
12	2	515692	DRY BEARING DIA.6
13	1	515689	PIVOT PIN
14	1	293902	M4 X 5 SSS CUP
15	1	515695	SOLENOID BRACKET
16	1	439241	SOLENOID
17	1	515797	PUSHER
18	1	005465	M6 HEX NUT (ZINC)
19	3	281532	M5 X 10 SHCS (ZINC)
20	10	262617	M6 FLATWASHER (ZINC)
21	7	173028	M6 X 16 HHCS (ZINC)
22	2	171570	M4 FLATWASHER (ZINC)
23	2	515684	ROLLER TUBE
24	2	515683	ROLLER SHAFT
25	4	515499	BALL BEARING
26	2	515822	SHORT FILLER PLATE, 2-BELT
27	2	420216	M4 X 10 SHCS (ZINC)
28	2	515833	DEEP GROOVE BALL BEARING
29	1	515799	TOGGLE SWITCH HARNESS
30	1	515840	TOGGLE SWITCH
31	2	516236	BRONZE FLANGED SLEEVE BEARING

PACKAGE STOP ASSEMBLY

515697-2

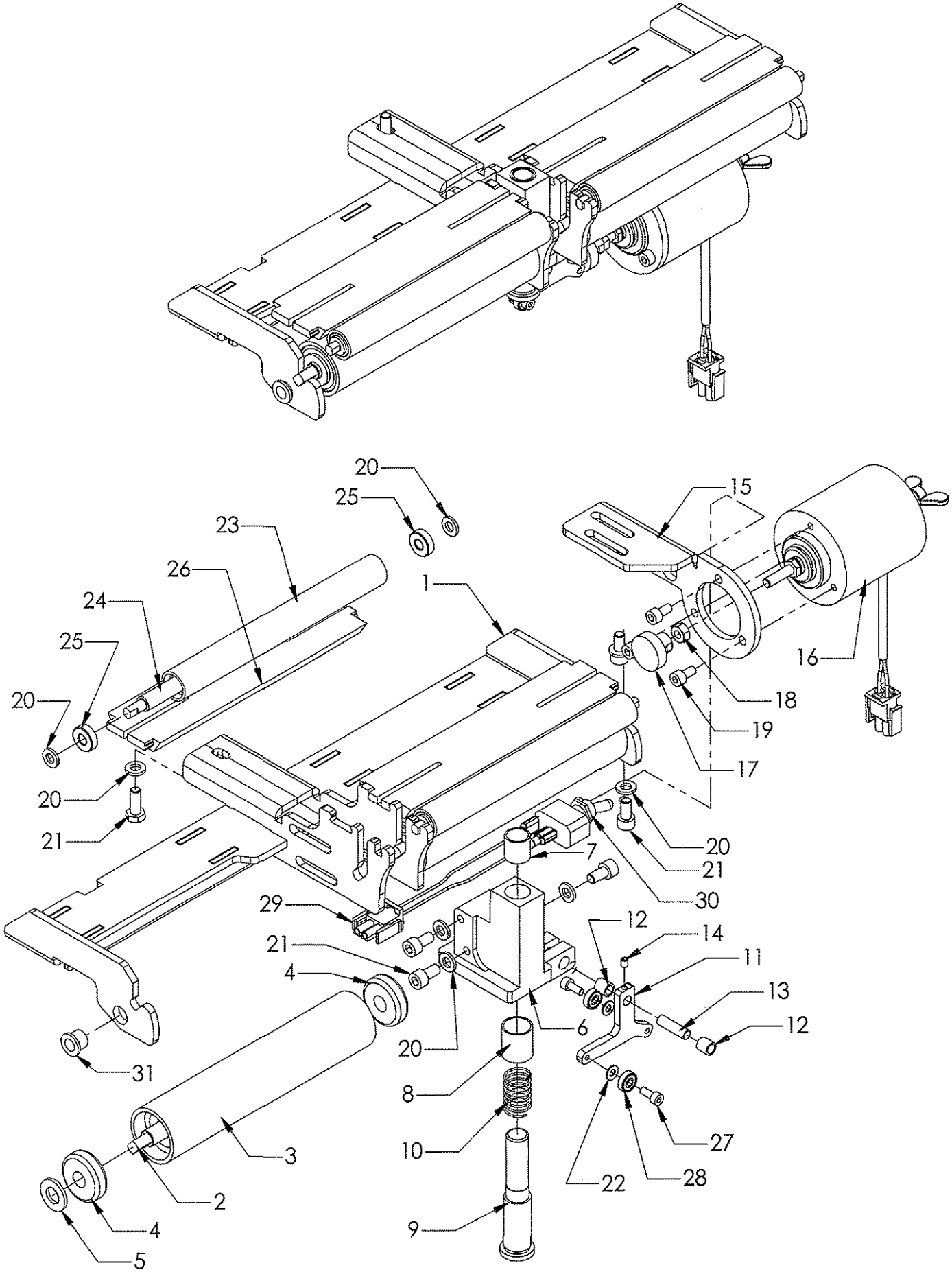

SIDE GUIDING KIT

515815-1

ITEM NO.	QTY.	PART NO.	DESCRIPTION
1	REF	REF	CLAMP BRACKET ASSEMBLY
2	1	515977	PHOTO EYE BRACKET - PHARMA
3	REF	REF	CLAMPING KNOB
4	REF	REF	PHOTOELECTRIC SENSOR ASSEMBLY
5	4	515828	SIDE GUIDING ASSEMBLY

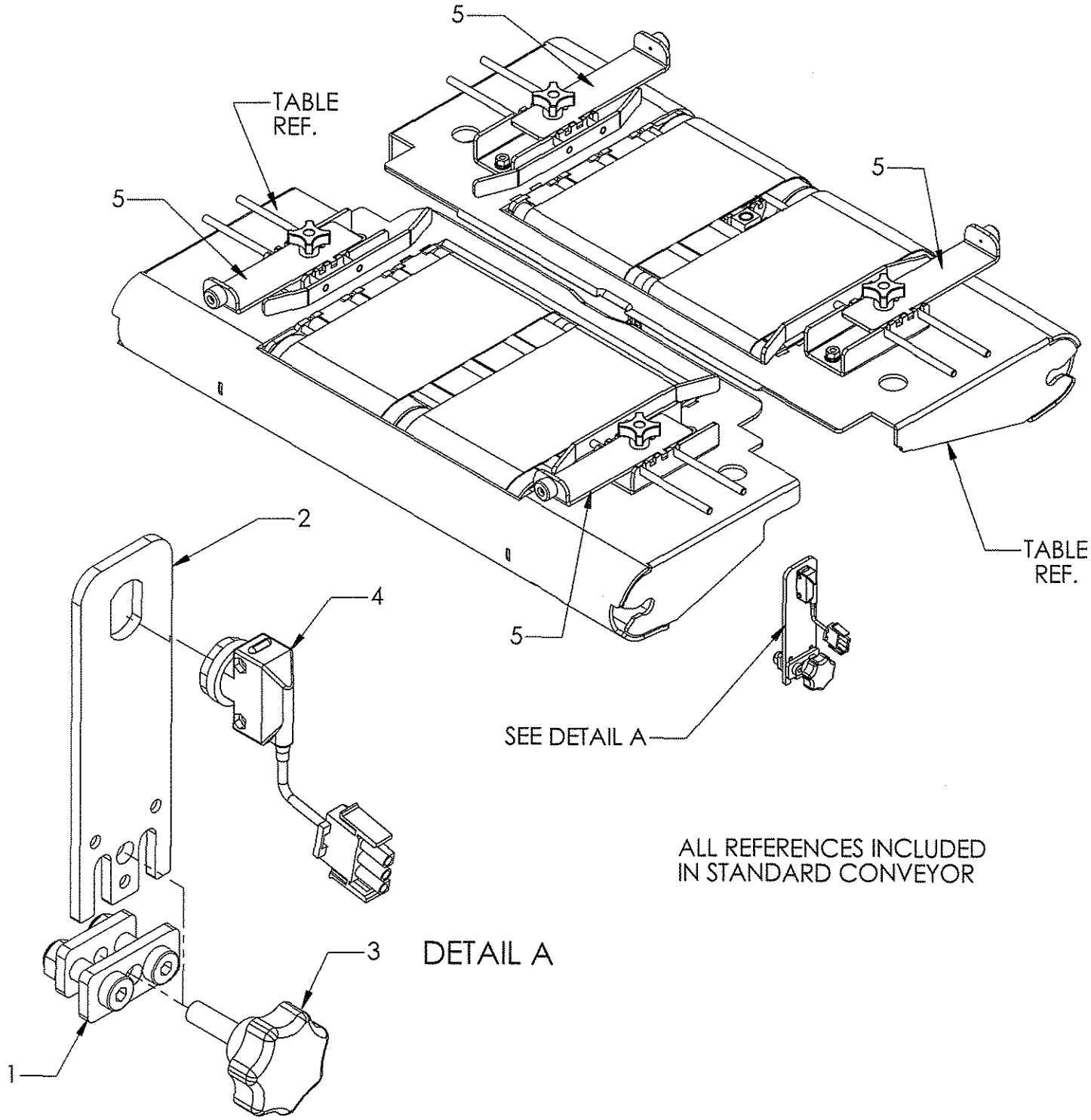

SIDE GUIDING ASSEMBLY 515828-1

ITEM NO.	QTY.	PART NO.	DESCRIPTION
1	1	515826	SIDE GUIDE MOUNT
2	1	280831	M8 X 50 SHCS
3	1	515872	SIDE GUIDE RAIL
4	1	160331	M8 X 20 SHCS (ZINC)
5	4	280335	M8 FLATWASHER
6	2	162381	M8 LOCKWASHER (ZINC)
7	2	164953	M8 HEX NUT (ZINC)
8	1	515827	CLAMP PLATE
9	1	515813	RUBBER BUMPER
10	1	420216	M4 X 10 SHCS (ZINC)
11	1	515820	PLASTIC KNOB WITH THREADED THRU HOLE

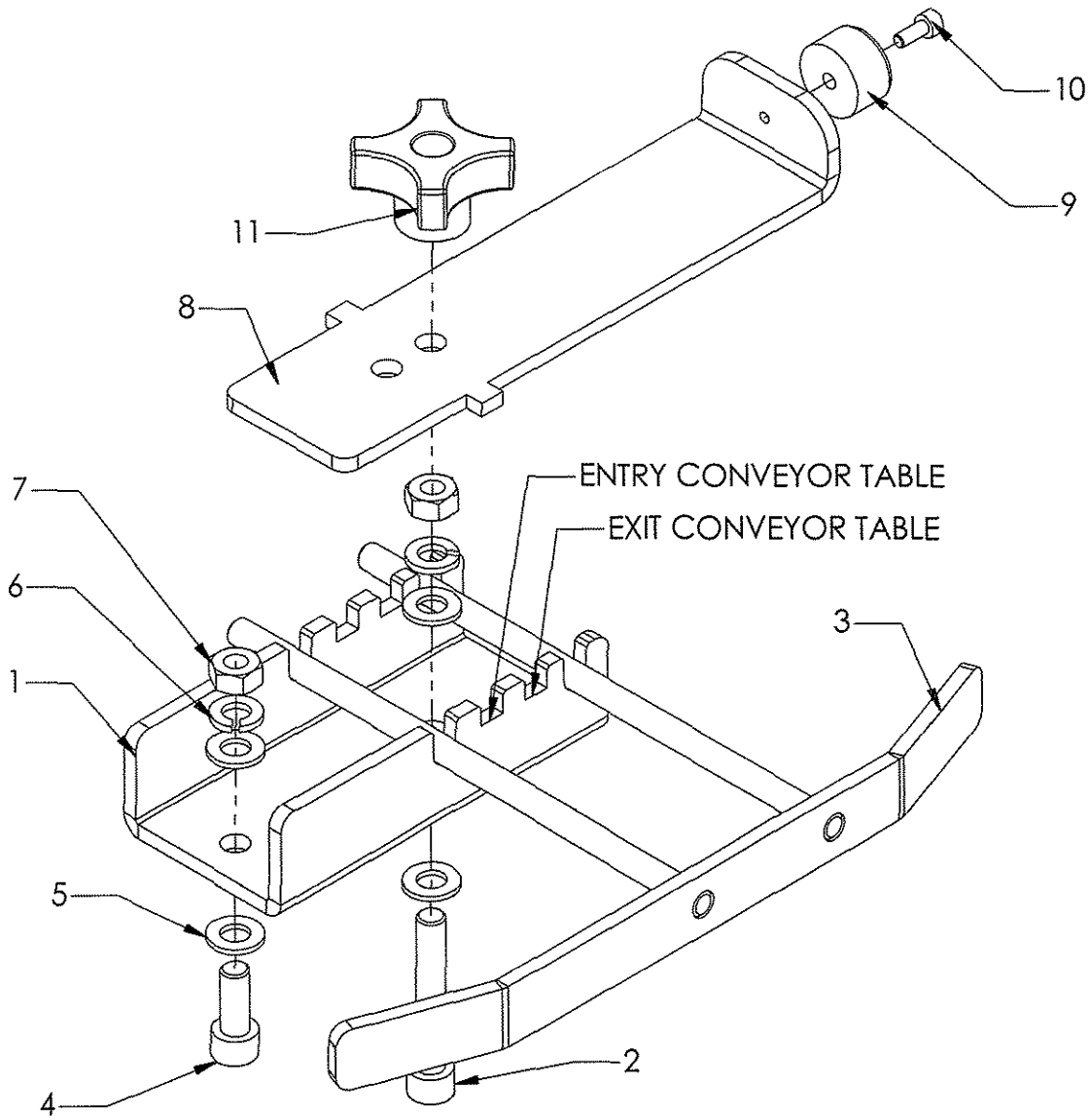

SIDE GUIDING ROLLER KIT

516333-1

ITEM NO.	QTY.	PART NO.	DESCRIPTION
1	REF	REF	CLAMP BRACKET ASSEMBLY
2	1	515977	PHOTO EYE BRACKET - PHARMA
3	REF	REF	CLAMPING KNOB
4	REF	REF	PHOTOELECTRIC SENSOR ASSEMBLY
5	1	516327	SIDE GUIDING ROLLER ASSEMBLY
6	2	515828	SIDE GUIDING ASSEMBLY

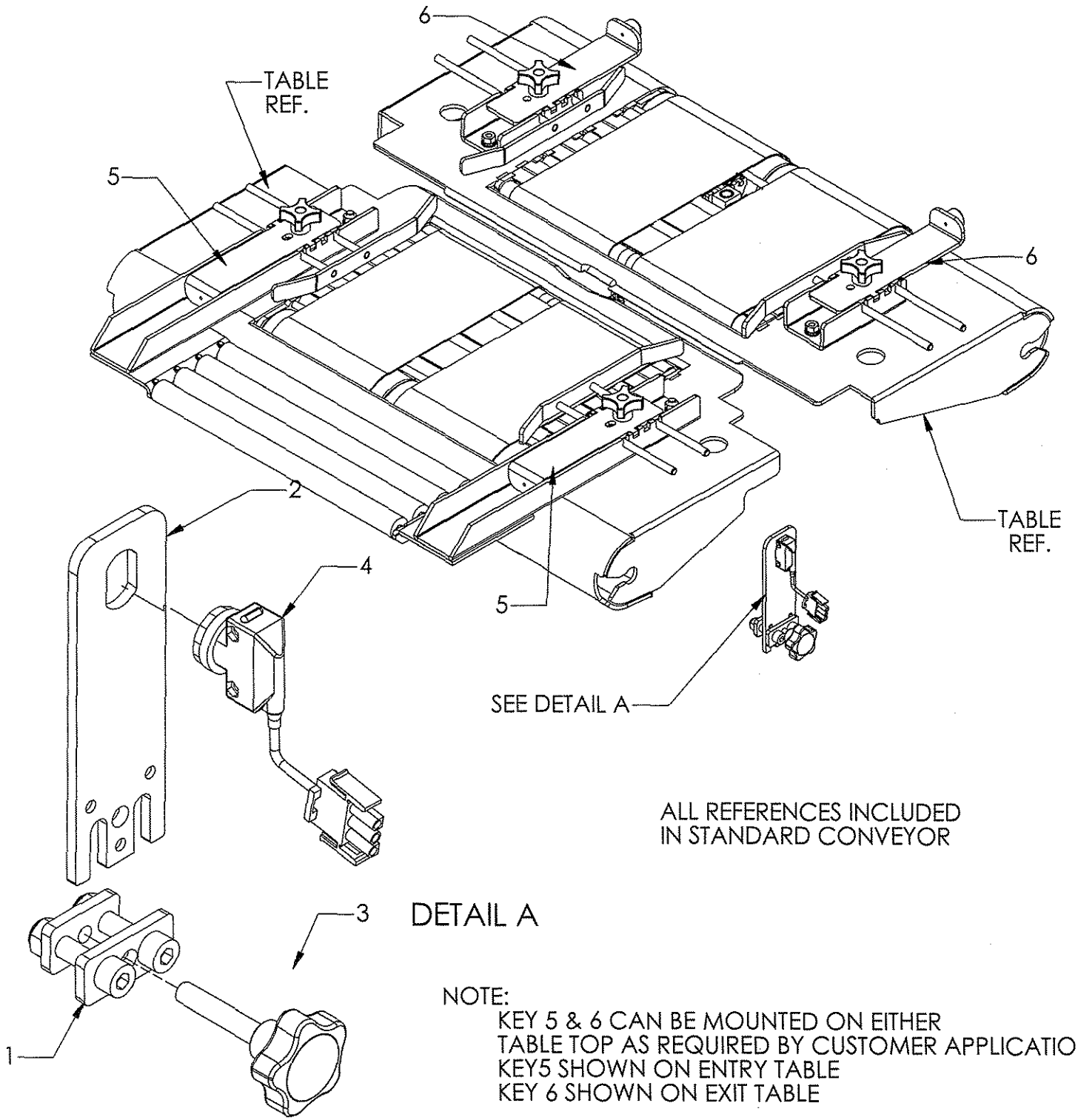

ALL REFERENCES INCLUDED IN STANDARD CONVEYOR

DETAIL A

NOTE:
KEY 5 & 6 CAN BE MOUNTED ON EITHER TABLE TOP AS REQUIRED BY CUSTOMER APPLICATION
KEY5 SHOWN ON ENTRY TABLE
KEY 6 SHOWN ON EXIT TABLE

SIDE GUIDING ROLLER KIT

516327-1

ITEM NO.	PART NUMBER	DESCRIPTION	EXPLODE/QTY.
1	515872	SIDE GUIDE RAIL	2
2	515820	PLASTIC KNOB WITH THREADED THRU HOLE	2
3	280797	14 " ROLLER	4
4	280335	M8 FLATWASHER	8
5	162381	M8 LOCKWASHER (ZINC)	4
6	280831	M8 X 50 SHCS	2
7	160331	M8 X 20 SHCS (ZINC)	2
8	515827	CLAMP PLATE	2
9	516328	SIDE GUIDE SUPPORT RIGHT	1
10	HNUT	M8 HEX NUT (ZINC)	4
11	516328	SIDE GUIDE SUPORT LEFT	1

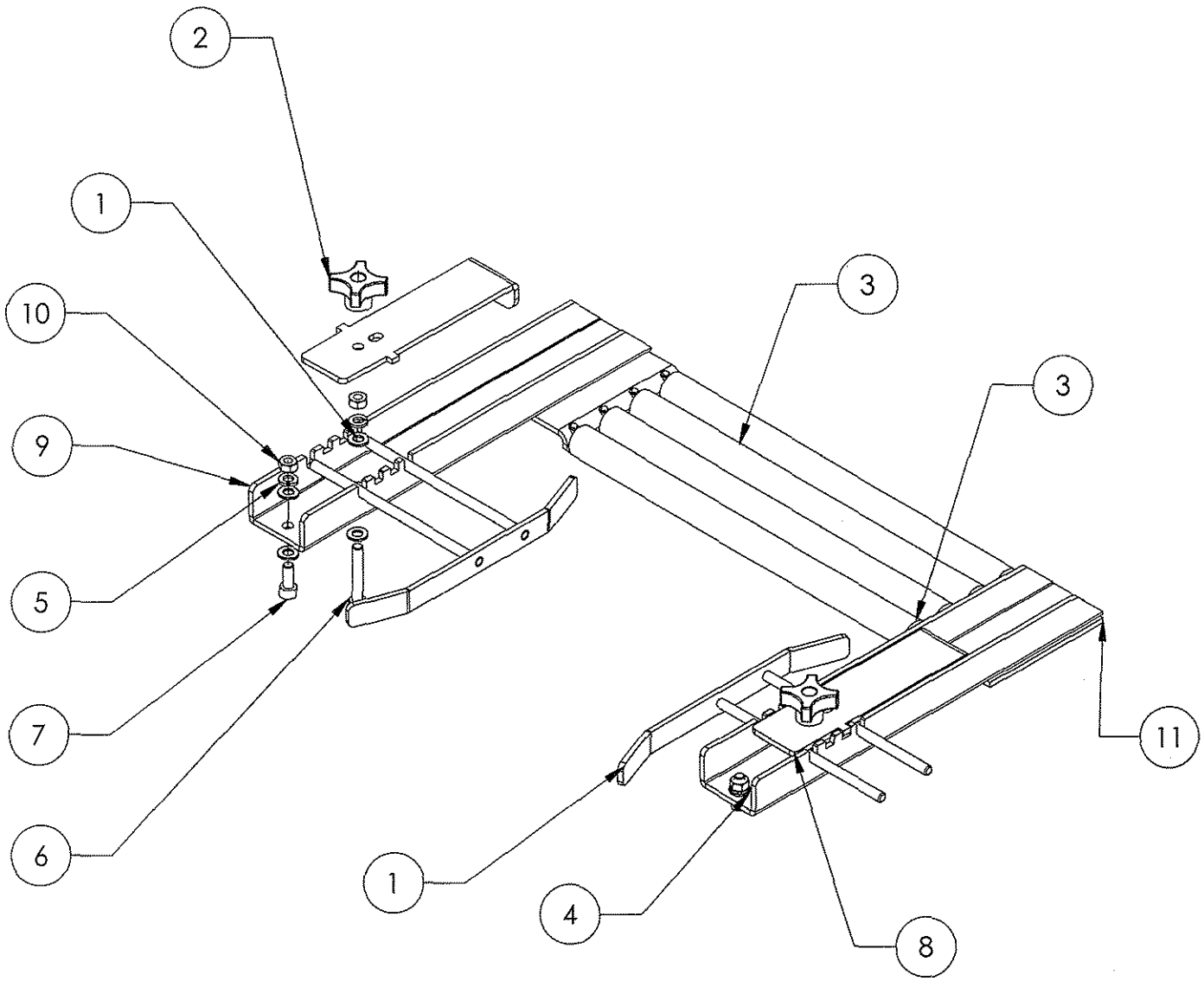

ELECTRICAL SCHEMATIC [100]
LBX-2330 PHARMA, 1 PHASE

519358-3

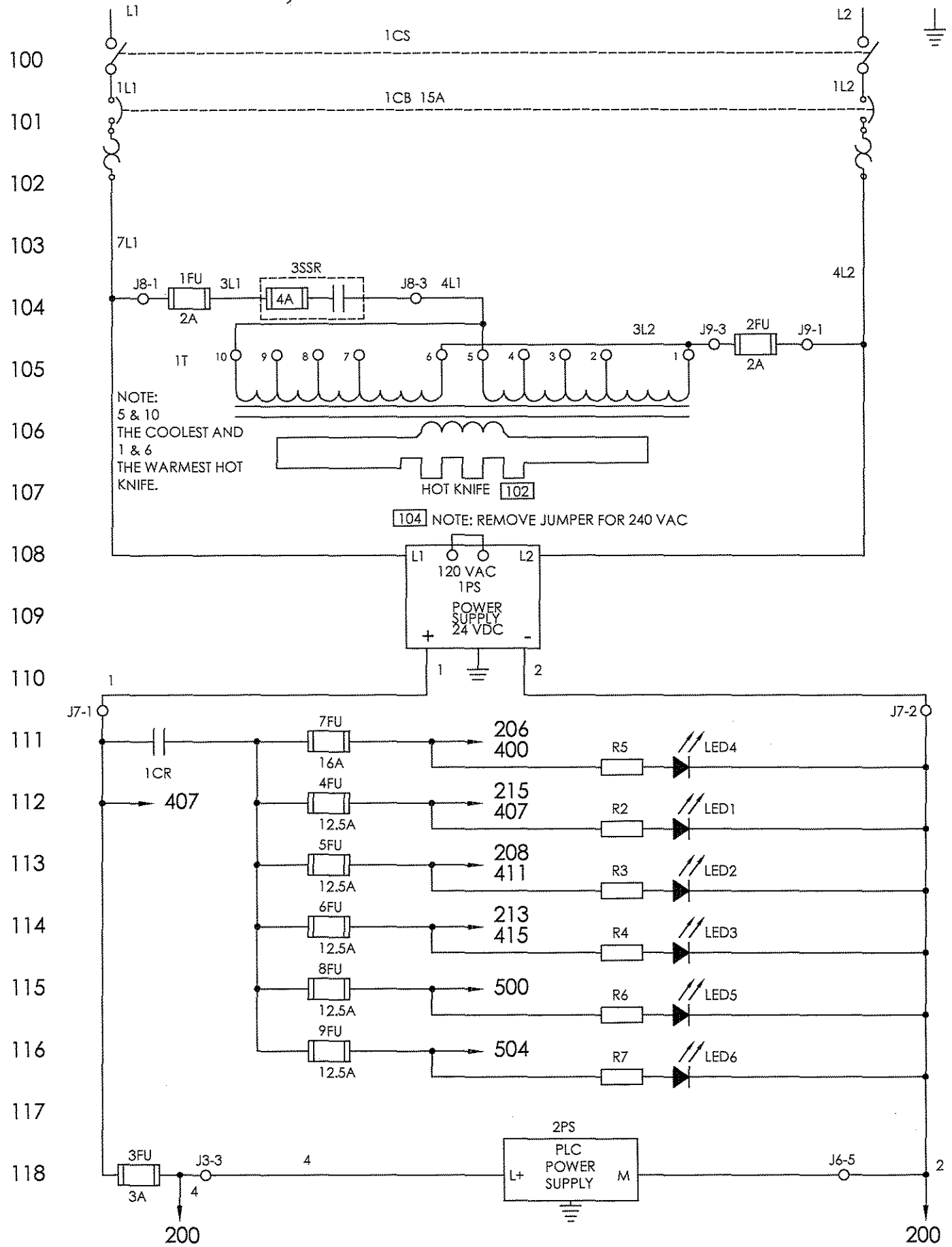

ELECTRICAL SCHEMATIC 100

519358-3

LBX - 2330 PHARMA, 1 PHASE

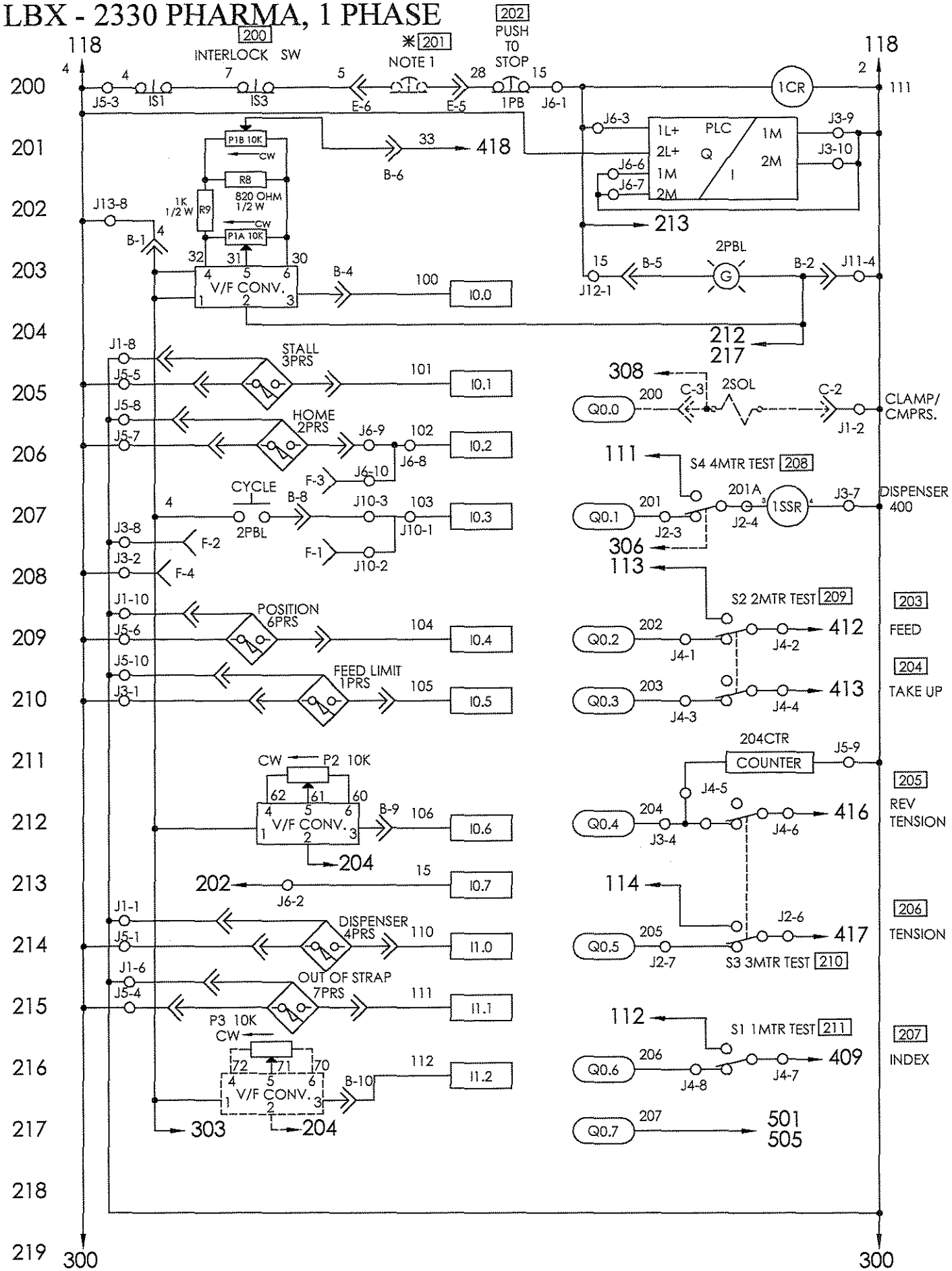

ELECTRICAL SCHEMATIC 100

LBX - 2330 PHARMA, 1 PHASE

519358-3

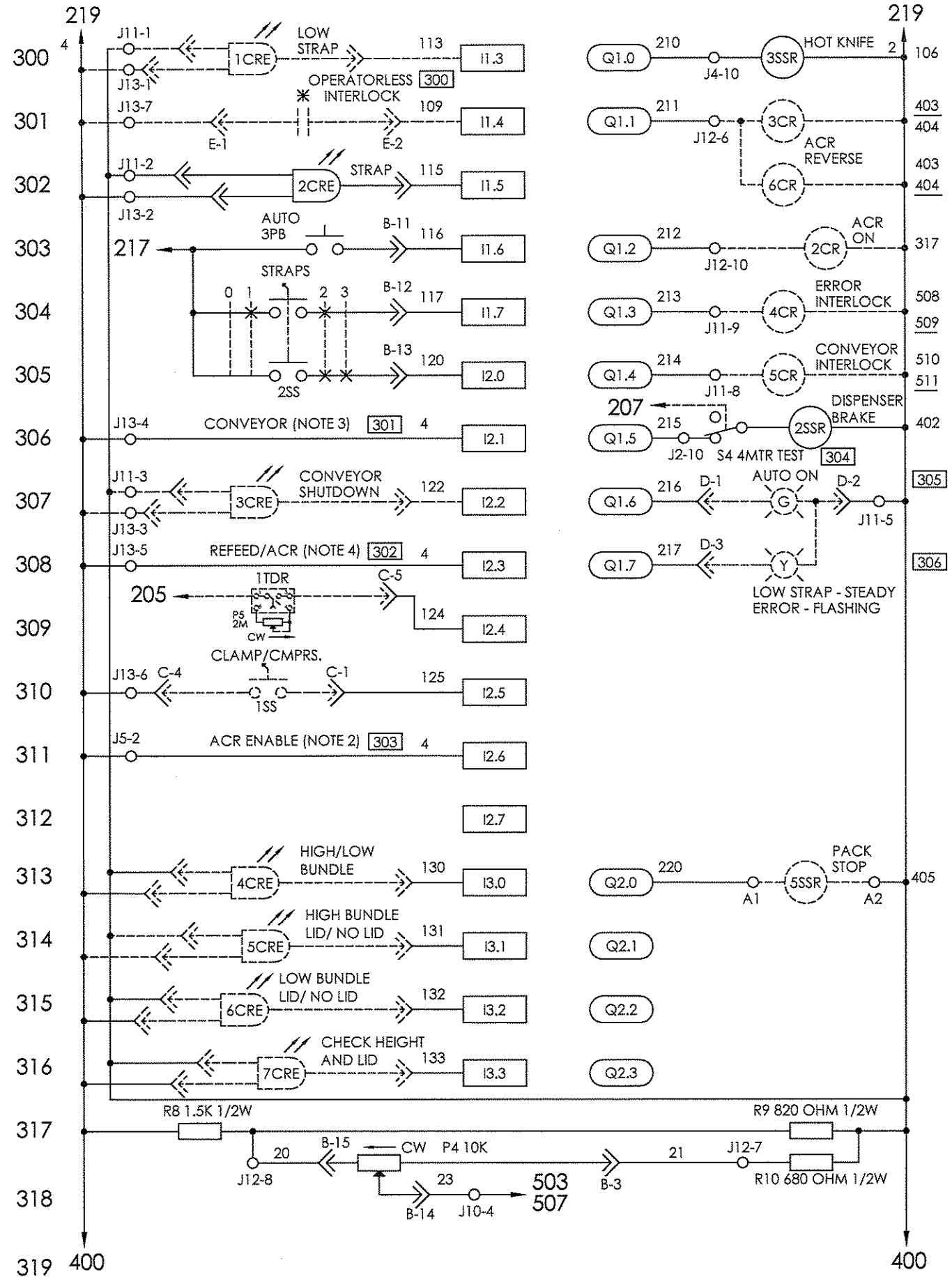

ELECTRICAL SCHEMATIC 100
LBX - 2330 PHARMA, 1 PHASE

519358-3

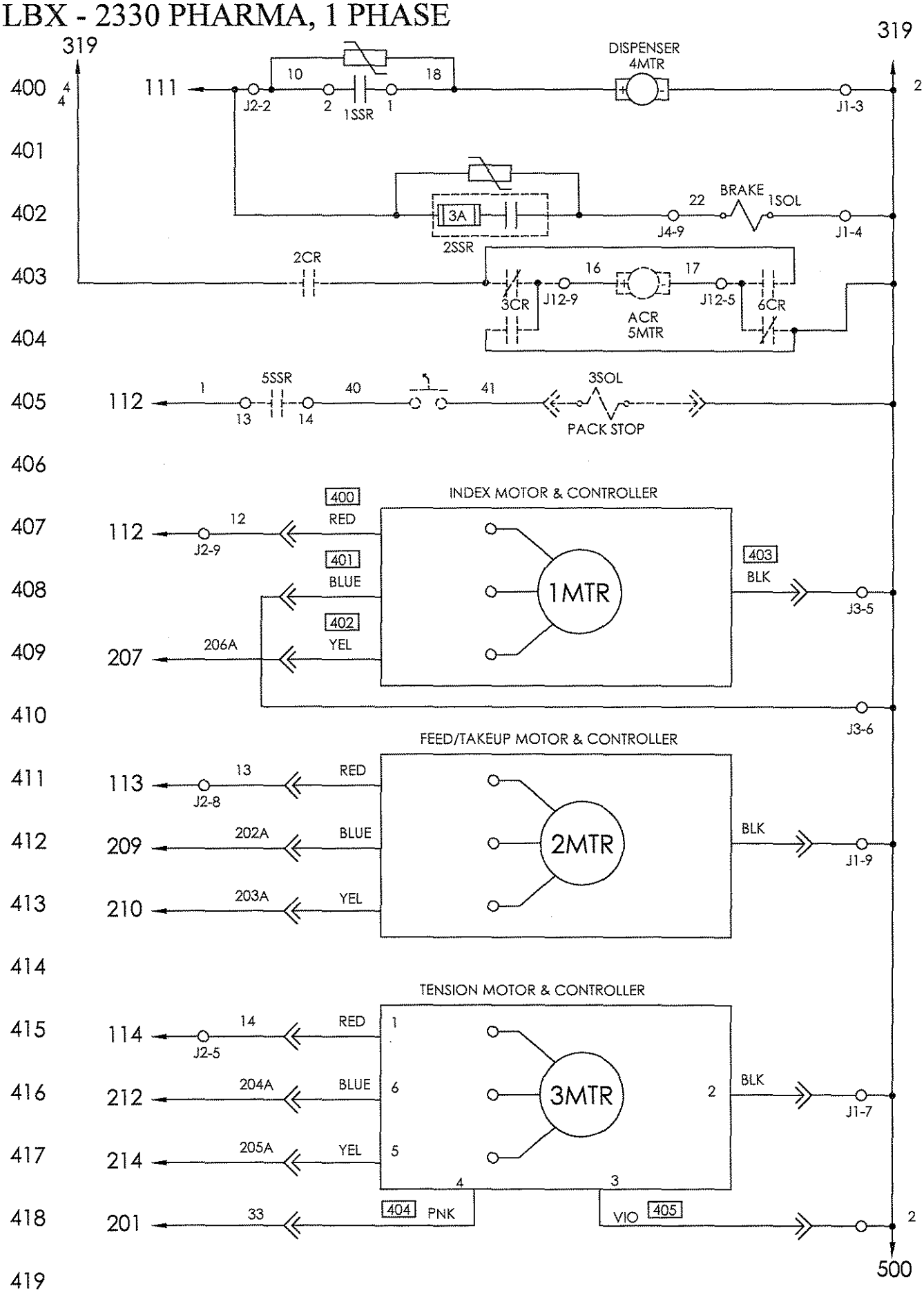

ELECTRICAL SCHEMATIC 100 — 519358-3

LBX - 2330 PHARMA, 1 PHASE

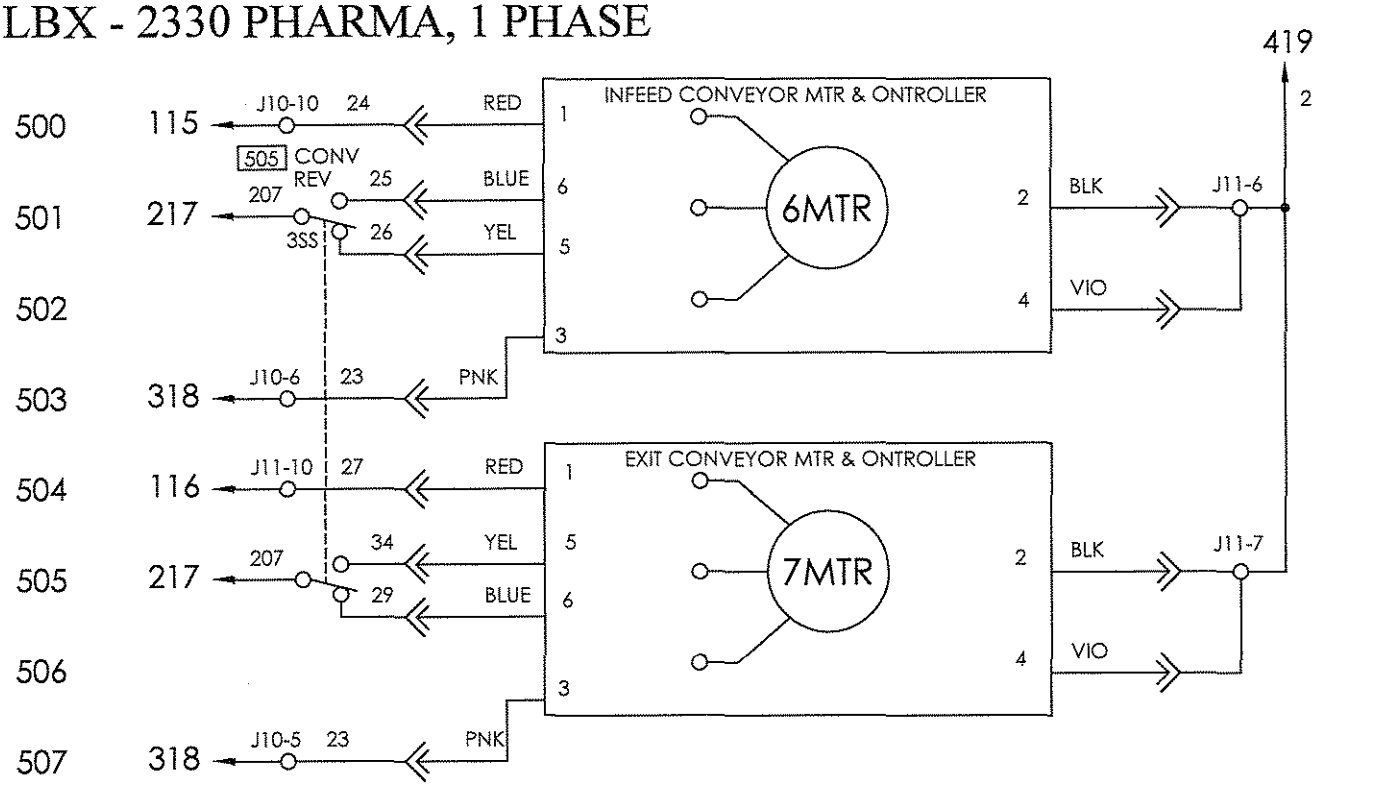

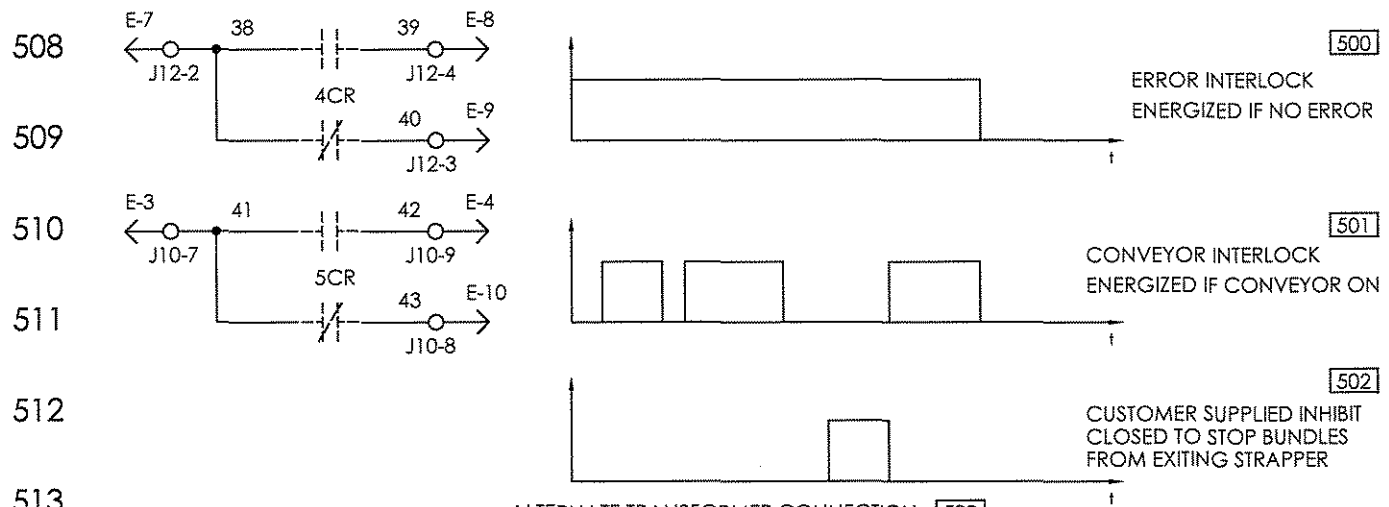

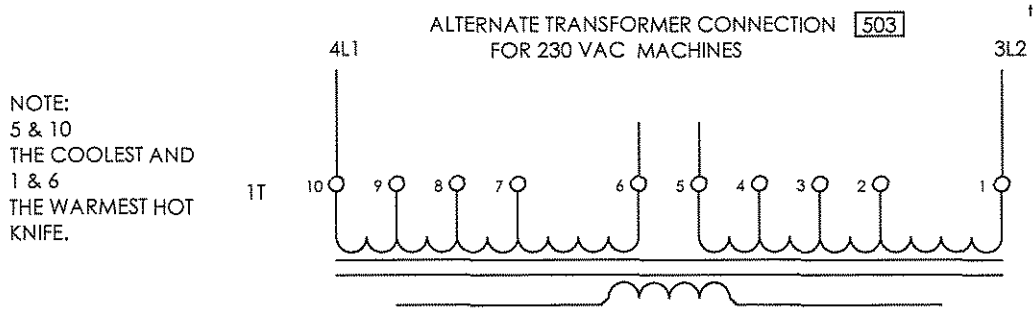

517 504
NOTES:
* Indicates component supplied by customer.
Components shown with dashed lines are optional.

518
1. Signode supplies jumper as shown. If customer supplies remote E-Stop the jumper must be removed.
2. Connect wire #4 to PLC Input I2.6 to enable Automatic Cutoff and Refeed (ACR) option.
3. Connect wire #4 to PLC Input I2.1 to run conveyor on error.
4. Connect wire #4 to PLC Input I2.3 on ACR equiped machines to attempt refeed first then ACR.

ELECTRICAL SCHEMATIC 100 519358-3
LBX - 2330 PHARMA, 1PHASE

100-118		
	Français	**Deutsch**
100	Schéma électrique des connexions	SCHALTPLAN
102	Lame Chaffante	HEIZKEL
104	REMARQUES: ENLEVEZ CONNEXION POUR 240VAC	ANMERKUNG: ENTFERNEN Sie ANSCHLUSS FÜR 240VAC
1PS	Alimentation	STROMVERSORGUNG
1T	REMARQUES:5 & 10 est le plus frais & 1& 6 est le chaud le plus chaud Lame Chaffante	ANMERKUNG:5 & 10 IST DAS KÜHLSTE UNDSCHWARZES & 1& 6 IST DAS WÄRMSTE HEISSE HEIZKEL.
2PS	Alimentation PLC Automate	STROMVERSORGUNG PLC

200-218		
	Français	**Deutsch**
200	Interrupteur de verrouillage	Zum Anhalten drücken
201	Remarque: 1	ANMERKUNG: 1
202	Presser pour arrêter	STOSS ZU ANSCHLAG
203	MOTEUR DEBIT LIEN	Enschuß
204	MOTEUR DE RAVALEMENT	Rückzugs
205	INVERSION MOTEUR TENSION LIEN	Rückwärts Bandspann Antreib
206	MOTEUR TENSION LIEN	Bandspann Antreib
207	MOTEUR DE TETE DE CERCLAGE	Aggregat
208	S4 4MTR ESSAI	S4 4MTR TEST
209	S2 2MTR ESSAI	S2 2MTR TEST
210	S3 3MTR ESSAI	S3 3MTR TEST
211	S1 1MTR ESSAI	S1 1MTR TEST
3PRS	FIN DE RAVALEMENT	Stillstand
2PRS	TETE EN P.O.	Grundstellung
2PBL	DEPARTE CYCLE	Fußschalter
6PRS	DETECTEUR DE PROXIMITE	Position
1PRS	FIN DE DEBIT	Einlauf Ende
4PRS	ACCUMULATEUR LIEN	Zufuhr
7PRS	HORS DE LA LIEN	Aus Spule heraus
2SOL	BRIDE/COMPRESSION	Kompression
1SSR	MOTEUR DEVIDOIR	Bandspeicher
204CTR	COMPTEUR	Zähler

ELECTRICAL SCHEMATIC 100 519358-3
LBX - 2330 PHARMA, 1PHASE

300-318		
	Français	Deutsch
300	INTERSERRURE	Sperre
301	CONVOYEUR (REMARQUE: 3)	Förderwerk (Anmerkung: 3)
302	ACR (REMARQUE: 4)	ACR (Anmerkung: 4)
303	ACR PERMETTEZ (REMARQUE: 2)	ACR Ermöglichen Sie (Anmerkung: 2)
304	S4 4MTR ESSAI	S4 4MTR TEST
305	AUTO SUR	Auto es ein
306	BAS LIEN- RÉGULIER ERREUR - CLIGNOTANT	Band knapp - Unveränderlich Störung - Blitzen
1CRE	LIEN INSUFFISANT	Band knapp
2CRE	LIEN	Spule
3PB	AUTO	Auto
2SS	SÉLECTEUR DE LIEN	Spulen
3CRE	ARRÊT DE CONVOYEUR	Förderwerk Abschaltung
1SS	BRIDE/COMPRESSION	Kompression
3SSR	LAME CHAFFANTE	Heiß Heizkel
3CR,6CR	ACR INVERSE	ACR Rückseite
4CR	ERREUR INTERSERRURE	Störung
5CR	CONVOYEUR INTERSERRURE	Förderwerk Sicherheitskreis
2SSR	FREIN DE DEVIDIOR	Bandspeicher Bremse
4CRE	HAUT/BAS PAQUET	HOCH/NIEDRIG BÜNDEL
5CRE	HAUT PAQUET COUVERCLE/ NON COUVERCLE	HOCH BÜNDEL KAPPE/ NEIN KAPPE
6CRE	BAS PAQUET COUVERCLE/ NON COUVERCLE	NIEDRIG BÜNDEL KAPPE/ NEIN KAPPE
7CRE	CONTRÔLE TAILLE ET COUVERCLE	ÜBERPRÜFUNG HÖHE UND KAPPE
5SSR	PAQUET ARRÊT	SATZ ANSCHLAG

400-418		
	Français	Deutsch
400	ROUGE	Rot
401	BLEU	Blau
402	JAUNE	Gelb
403	NOIR	Schwarz
404	PNK	Pink
405	VIO	Violett
1MTR	MOTEUR DE TETE DE CERCLAGE & COMMANDE	Aggregatmotor & Steuerung
2MTR	MOTEUR DEBIT LIEN & COMMANDE	Einschußmotor-Rückzugsmotor & Steuerung
3MTR	MOTEUR TENSION LIEN & COMMANDE	Bandspann-Antreib & Steuerung
4MTR	DISTRIBUTEUR	Bandspeicher
1SOL	FREIN	Bremse
5MTR	ACR	ACR
3SOL	PAQUET ARRÊT	SATZ ANSCHLAG

500-518		
	Français	Deutsch
500	INTERSERRURE ERREUR ACTIVÉ SI AUCUNE ERREUR	Störung Sicherheitskreis Eingeschaltet wenn keine Störung
501	COUPLAGE DE CONVOYEUR ACTIVÉ SI CONVOYEUR DESSUS	Förderwerk-Sicherheitskreis eingeschaltet wenn förderwerk funktion
502	LE CLIENT FOURNI EMPÊCHENT FERMÉ POUR ARRÊTER DES PAQUETS DE SORTIR STRAPPER	Kunde geliefert sperre Geschlossen, um zu stoppen bündel von herausnehmen bügeler
503	RACCORDEMENTS ALTERNATIFS DE TRANSFORMATEUR DE COMMANDE POUR 230 VCA MACHINES	Alternative steuerung transformator anschlüsse für 230 VAC maschinen
504	REMARQUE: * Indique le composant fourni par le client. Les composants montrés avec des lignes tirées sont facultatifs. 1. Signode fournit le pullover comme montré. Si le client fournit à distance E-Arrêtez le pullover doit être enlevé. 2. Reliez le fil #4 à Automate(PLC) Entrée I2.6 à permettez Automatique Cutoff an Refeed (ACR) option. 3. Reliez le fil #4 à Automate(PLC) Entrée I2.1 pour courir le convoyeur sur l'erreur. 4. Reliez le fil #4 à Automate(PLC) Entrée I2.3 sur ACR équipé des machines pour essayer debit d'abord puis ACR.	ANMERKUNG: * Zeigt an bestandteil geliefert durch kunde. Bestandteile dargestellt mit gestricheite Linien sind wahlweise freigestellt. 1. Signode versorgungs schließt an wie gezeigt. Wenn kunde versorgungs entfernt E-Anschlag der Überbrücker muß sein entfernt. 2. Schließen Sie an leitung #4 zu PLC Eingang I2.6 ermöglichen Automatisch Abgeschnitten Zufuhr (ACR) wahl. 3. Schließen Sie an leitung #4 zu PLC Eingang I2.1 zu laufen förderwerk auf Störung. 4. Schließen Sie an leitung #4 zu PL
505	CONVOYEUR INVERSE	Förderwerk Rückseite
6MTR	ENTRÉE CONVOYEUR MOTEUR ET CONTRÔLEUR	Eingang Förderwerk Mtr. & Steuerpult
7MTR	SORTIE CONVOYEUR MOTEUR ET CONTRÔLEUR	Ausgang Förderwerk Mtr. & Steuerpult

ELECTRICAL SCHEMATIC 100
LBX-2330 PHARMA, 3 PHASE

519359-3

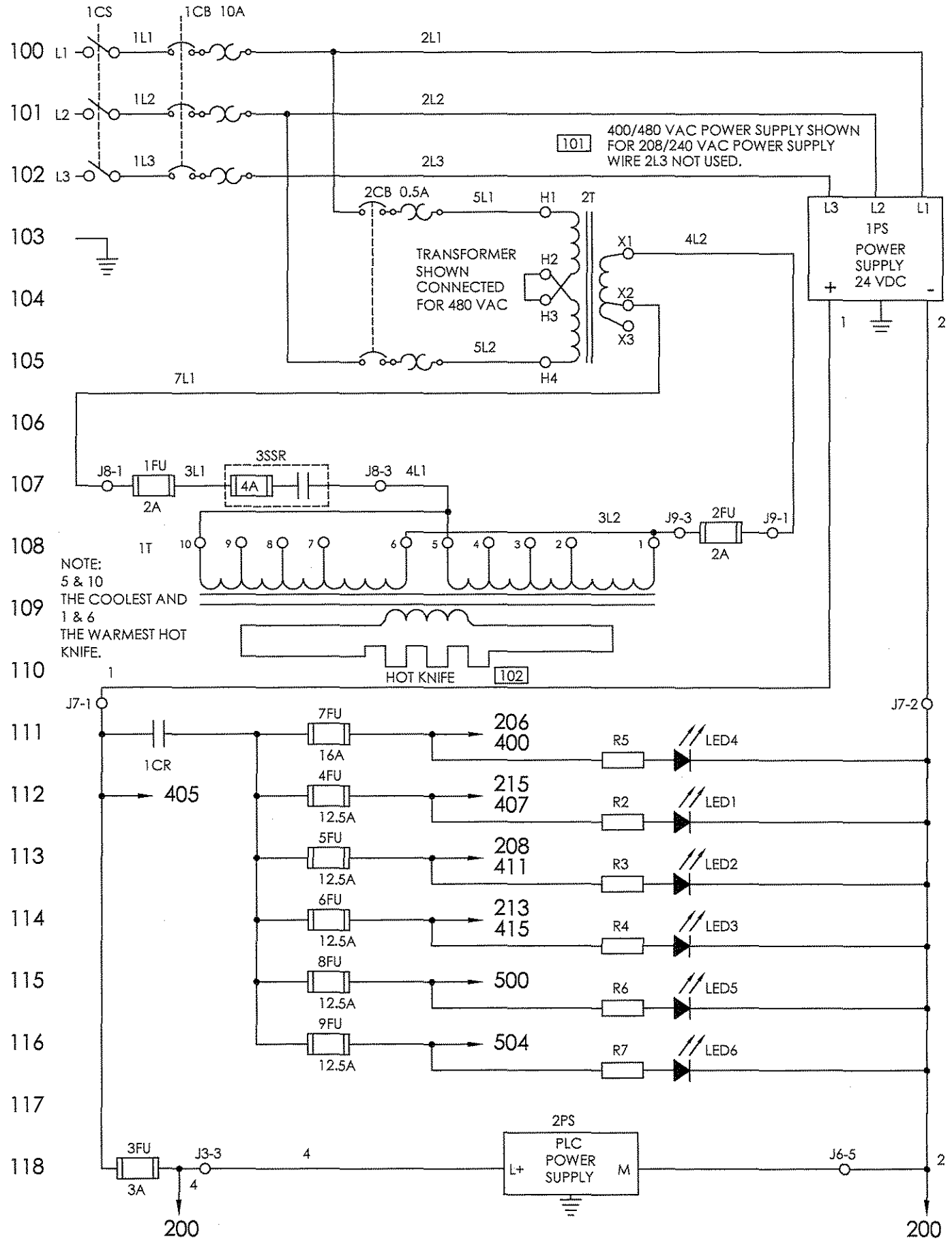

ELECTRICAL SCHEMATIC [100]

519359-3

LBX - 2330 PHARMA, 3 PHASE

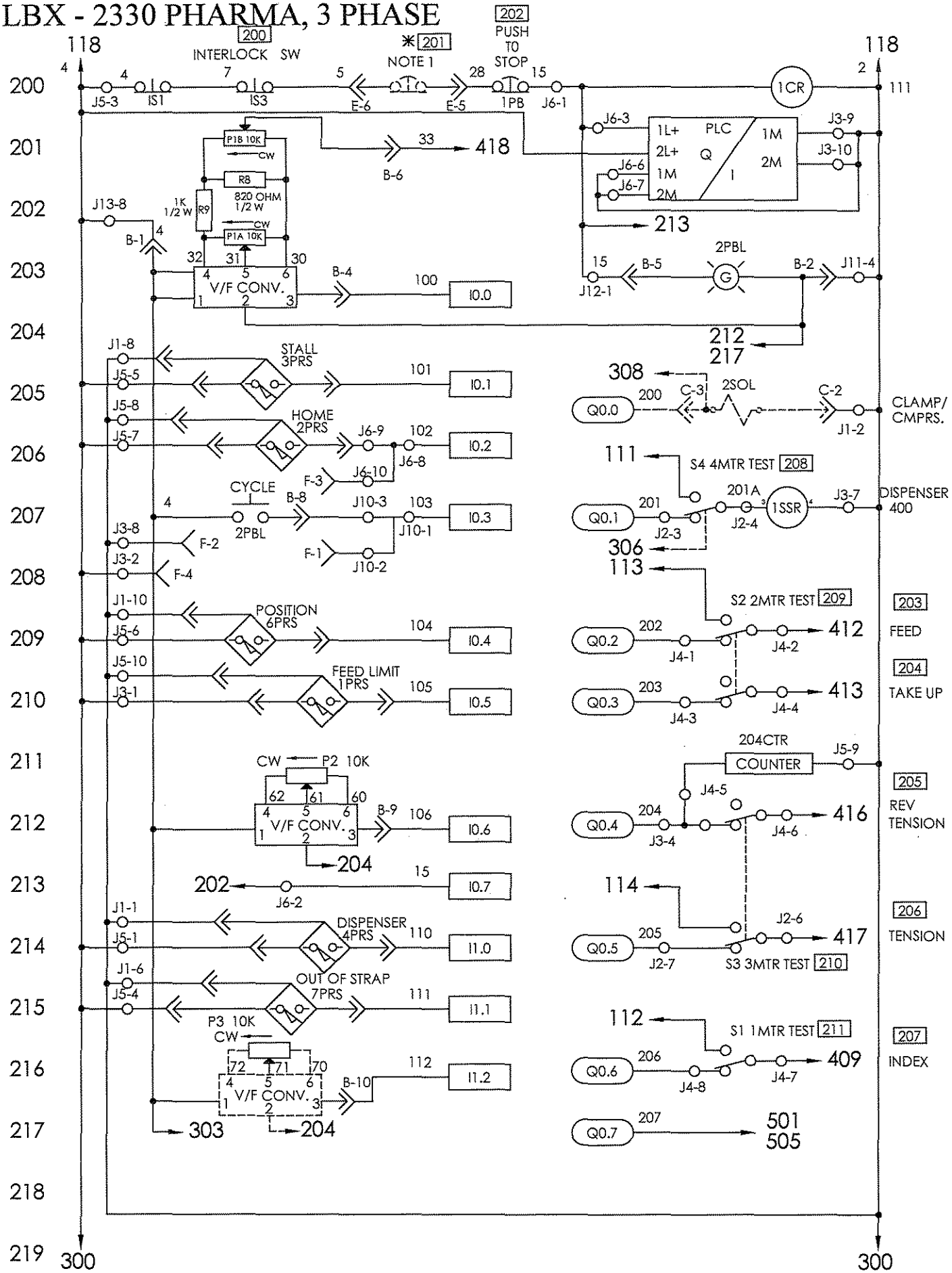

ELECTRICAL SCHEMATIC 100

LBX - 2330 PHARMA, 3 PHASE

519359-3

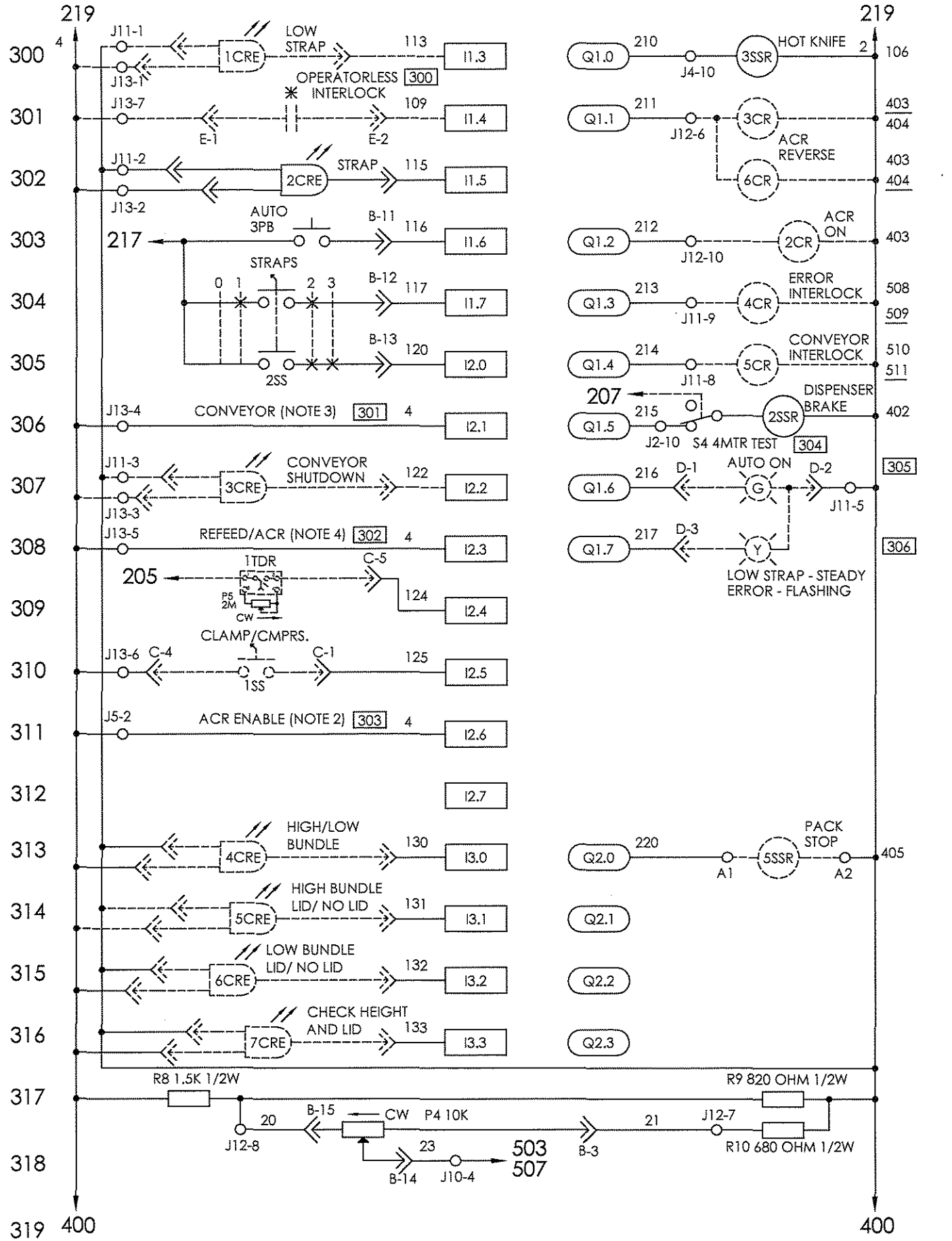

ELECTRICAL SCHEMATIC 100

519359-3

LBX - 2330 PHARMA, 3 PHASE

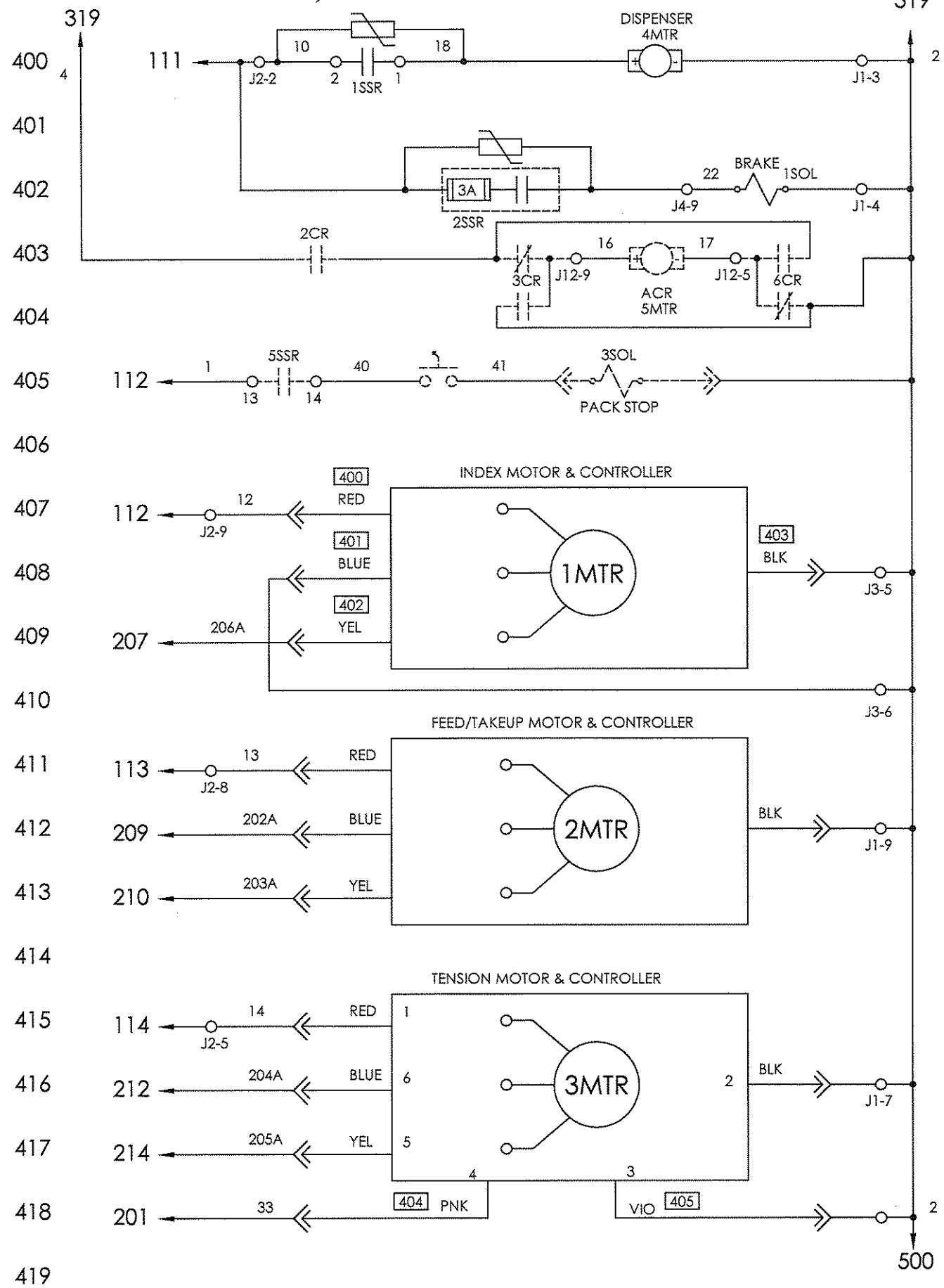

ELECTRICAL SCHEMATIC 100 — 519359-3

LBX - 2330 PHARMA, 3 PHASE

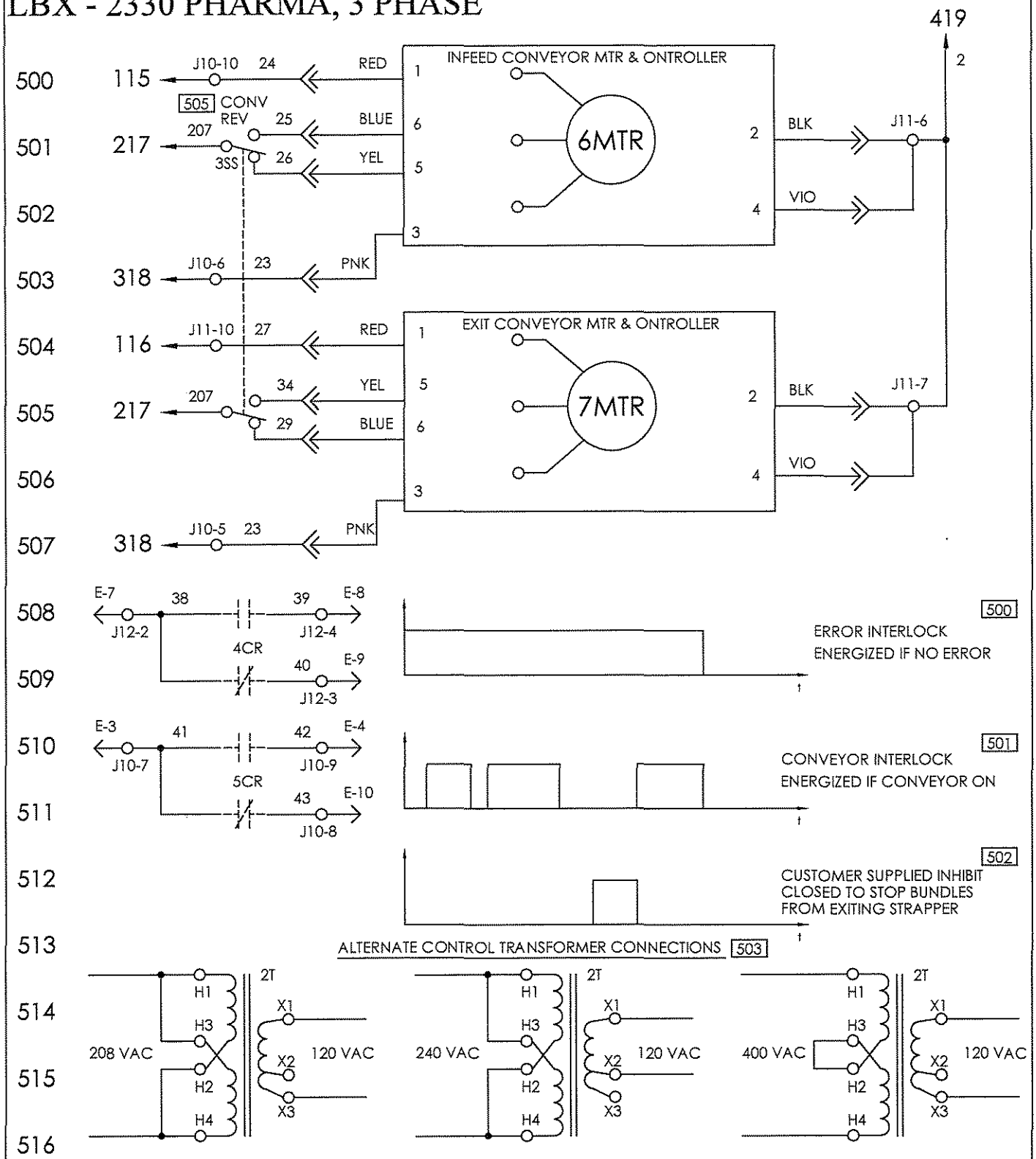

504

NOTES:

* Indicates component supplied by customer.
Components shown with dashed lines are optional.

1. Signode supplies jumper as shown. If customer supplies remote E-Stop the jumper must be removed.
2. Connect wire #4 to PLC input I2.6 to enable Automatic Cutoff and Refeed (ACR) option.
3. Connect wire #4 to PLC input I2.1 to run conveyor on error.
4. Connect wire #4 to PLC input I2.3 on ACR equiped machines to attempt refeed first then ACR.

ELECTRICAL SCHEMATIC 100 519359-3
LBX - 2330 PHARMA, 3 PHASE

100-118		
	Français	**Deutsch**
100	Schéma électrique des connexions	SCHALTPLAN
101	400/480 VAC ALIMENTATION MONTRÉ POUR 208/240 VAC ALIMENTATION FIL 2L3 NON UTILISÉ.	400/480 VAC STROMVERSORGUNG GEZEIGT FÜR 208/240 VAC STROMVERSORGUNG LEITUNG 2L3 NICHT VERWENDET.
102	Lame Chaffante	HEIZKEL
2T	Transformateur représenté avec connexion pour 480 VAC	TRANSFORMATOR DARGESTELLT ANGESCHLOSSEN LEITUNG 480 VAC
1PS	Alimentation	STROMVERSORGUNG
1T	REMARQUES:5 & 10 est le plus frais & 1& 6 est le chaud le plus chaud Lame Chaffante	ANMERKUNG:5 & 10 IST DAS KÜHLSTE UNDSCHWARZES & 1& 6 IST DAS WÄRMSTE HEISSE HEIZKEL.
2PS	Alimentation PLC Automate	STROMVERSORGUNG PLC

200-218		
	Français	**Deutsch**
200	Interrupteur de verrouillage	Zum Anhalten drücken
201	Remarque: 1	ANMERKUNG: 1
202	Presser pour arrêter	STOSS ZU ANSCHLAG
203	MOTEUR DEBIT LIEN	Enschuß
204	MOTEUR DE RAVALEMENT	Rückzugs
205	INVERSION MOTEUR TENSION LIEN	Rückwärts Bandspann Antreib
206	MOTEUR TENSION LIEN	Bandspann Antreib
207	MOTEUR DE TETE DE CERCLAGE	Aggregat
208	S4 4MTR ESSAI	S4 4MTR TEST
209	S2 2MTR ESSAI	S2 2MTR TEST
210	S3 3MTR ESSAI	S3 3MTR TEST
211	S1 1MTR ESSAI	S1 1MTR TEST
3PRS	FIN DE RAVALEMENT	Stillstand
2PRS	TETE EN P.O.	Grundstellung
2PBL	DEPARTE CYCLE	Fußschalter
6PRS	DETECTEUR DE PROXIMITE	Position
1PRS	FIN DE DEBIT	Einlauf Ende
4PRS	ACCUMULATEUR LIEN	Zufuhr
7PRS	HORS DE LA LIEN	Aus Spule heraus
2SOL	BRIDE/COMPRESSION	Kompression
1SSR	MOTEUR DEVIDOIR	Bandspeicher
204CTR	COMPTEUR	Zähler

ELECTRICAL SCHEMATIC 100 519359-3
LBX - 2330 PHARMA, 3PHASE

300-318		
	Français	Deutsch
300	INTERSERRURE	Sperre
301	CONVOYEUR (REMARQUE: 3)	Förderwerk (Anmerkung: 3)
302	ACR (REMARQUE: 4)	ACR (Anmerkung: 4)
303	ACR PERMETTEZ (REMARQUE: 2)	ACR Ermöglichen Sie (Anmerkung: 2)
304	S4 4MTR ESSAI	S4 4MTR TEST
305	AUTO SUR	Auto es ein
306	BAS LIEN- RÉGULIER ERREUR - CLIGNOTANT	Band knapp - Unveränderlich Störung - Blitzen
1CRE	LIEN INSUFFISANT	Band knapp
2CRE	LIEN	Spule
3PB	AUTO	Auto
2SS	SÉLECTEUR DE LIEN	Spulen
3CRE	ARRÊT DE CONVOYEUR	Förderwerk Abschaltung
1SS	BRIDE/COMPRESSION	Kompression
3SSR	LAME CHAFFANTE	Heiß Heizkel
3CR,6CR	ACR INVERSE	ACR Rückseite
4CR	ERREUR INTERSERRURE	Störung
5CR	CONVOYEUR INTERSERRURE	Förderwerk Sicherheitskreis
2SSR	FREIN DE DEVIDIOR	Bandspeicher Bremse
4CRE	HAUT/BAS PAQUET	HOCH/NIEDRIG BÜNDEL
5CRE	HAUT PAQUET COUVERCLE/ NON COUVERCLE	HOCH BÜNDEL KAPPE/ NEIN KAPPE
6CRE	BAS PAQUET COUVERCLE/ NON COUVERCLE	NIEDRIG BÜNDEL KAPPE/ NEIN KAPPE
7CRE	CONTRÔLE TAILLE ET COUVERCLE	ÜBERPRÜFUNG HÖHE UND KAPPE
5SSR	PAQUET ARRÊT	SATZ ANSCHLAG

400-418		
	Français	Deutsch
400	ROUGE	Rot
401	BLEU	Blau
402	JAUNE	Gelb
403	NOIR	Schwarz
404	PNK	Pink
405	VIO	Violett
1MTR	MOTEUR DE TETE DE CERCLAGE & COMMANDE	Aggregatmotor & Steuerung
2MTR	MOTEUR DEBIT LIEN & COMMANDE	Einschußmotor-Rückzugsmotor & Steuerung
3MTR	MOTEUR TENSION LIEN & COMMANDE	Bandspann-Antreib & Steuerung
4MTR	DISTRIBUTEUR	Bandspeicher
1SOL	FREIN	Bremse
5MTR	ACR	ACR
3SOL	PAQUET ARRÊT	SATZ ANSCHLAG

500-518		
	Français	Deutsch
500	INTERSERRURE ERREUR ACTIVÉ SI AUCUNE ERREUR	Störung Sicherheitskreis Eingeschaltet wenn keine Störung
501	COUPLAGE DE CONVOYEUR ACTIVÉ SI CONVOYEUR DESSUS	Förderwerk-Sicherheitskreis eingeschaltet wenn förderwerk funktion
502	LE CLIENT FOURNI EMPÊCHENT FERMÉ POUR ARRÊTER DES PAQUETS DE SORTIR STRAPPER	Kunde geliefert sperre Geschlossen, um zu stoppen bündel von herausnehmen bügeler
503	RACCORDEMENTS ALTERNATIFS DE TRANSFORMATEUR DE COMMANDE POUR 230 VCA MACHINES	Alternative steuerung transformator anschlüsse für 230 VAC maschinen
504	REMARQUE: * Indique le composant fourni par le client. Les composants montrés avec des lignes tirées sont facultatifs. 1. Signode fournit le pullover comme montré. Si le client fournit à distance E-Arrêtez le pullover doit être enlevé. 2. Reliez le fil #4 à Automate(PLC) Entrée I2.6 à permettez Automatique Cutoff an Refeed (ACR) option. 3. Reliez le fil #4 à Automate(PLC) Entrée I2.1 pour courir le convoyeur sur l'erreur. 4. Reliez le fil #4 à Automate(PLC) Entrée I2.3 sur ACR équipé des machines pour essayer debit d'abord puis ACR.	ANMERKUNG: * Zeigt an bestandteil geliefert durch kunde. Bestandteile dargestellt mit gestrichelte Linien sind wahlweise freigestellt. 1. Signode versorgungs schließt an wie gezeigt. Wenn kunde versorgungs entfernt E-Anschlag der Überbrücker muß sein entfernt. 2. Schließen Sie an leitung #4 zu PLC Eingang I2.6 ermöglichen Automatisch Abgeschnitten Zufuhr (ACR) wahl. 3. Schließen Sie an leitung #4 zu PLC Eingang I2.1 zu laufen förderwerk auf Störung. 4. Schließen Sie an leitung #4 zu PL
505	CONVOYEUR INVERSE	Förderwerk Rückseite
6MTR	ENTRÉE CONVOYEUR MOTEUR ET CONTRÔLEUR	Eingang Förderwerk Mtr. & Steuerpult
7MTR	SORTIE CONVOYEUR MOTEUR ET CONTRÔLEUR	Ausgang Förderwerk Mtr. & Steuerpult

KEY	PART No.						DESCRIPTION
	515842	QTY.	515843	QTY.	515844	QTY.	
	110/220V 1Ph		460V/3Ph		230V/3Ph		
1	515607	1	515607	1	515607	1	POWER SUPPLY MOUNTING PLATE
2	515600	1	515604	1	515600	1	POWER SUPPLY
3	515609	1	515609	1	515609	1	POWER SUPPLY DIN RAIL
4	170118	4	170118	8	170118	8	M5 X 10 SBHCS (ZINC)
5	010076	19	010076	23	010076	23	M5 LOCKWASHER (ZINC)
6	171571	10	171571	14	171571	14	M5 FLATWASHER (ZINC)
7	272418	4	272418	4	272418	4	M5 X 12 SHCS (FLANGED ZINC)
8	070859	1	070859	1	070859	1	1/2" GLAND NUT/SLIP RING
9	N/A		084863	1	084863	1	GROMMET (3PH DOM/EURO)
	434851	1	N/A		N/A		CORD GRIP GROMMET, DOMESTIC
	434850	1	N/A		N/A		CORD GRIP GROMMET, EURO/UK
10	N/A		515605	1	515605	1	CIRCUIT BREAKER, 3 POLE
	515673	1	N/A		N/A		CIRCUIT BREAKER, 2 POLE
11	N/A		515633	1	515633	1	TRANSFORMER, 3 PH
12	N/A		515133	1	515133	1	CIRCUIT BREAKER, 2 POLE
13	515602	1	515602	1	515602	1	REAR ELECTRICAL PANEL COVER
14	435344	A/R	435344	A/R	435344	A/R	ELECTRICAL DOOR GASKET
15	N/A		434841	1	434841	1	POWER CORD (3PH 50/60Hz)
	434434	REF	N/A		N/A		POWER CORD 115V-60Hz-1Ph
	434478	REF	N/A		N/A		POWER CORD 230V-50Hz-1Ph UK
	434479	REF	N/A		N/A		POWER CORD 230V-50Hz-1Ph EURO
	434228	REF	N/A		N/A		POWER CORD 230V-50Hz-1Ph AUST
16	071940	1	071940	1	071940	1	CORD GRIP
17	515595	1	515595	1	515595	1	CONNECTOR PLATE, MOTOR
18	281015	4	281015	4	281015	4	M6 X 10 SHCS
19	481889	4	481889	4	481889	4	M6 LOCKWASHER (ZINC)
21	516283	1	516283	1	516283	1	CONNECTOR PLATE, 3PH
22	281532	9	281532	9	281532	9	M5 X 10 SHCS (ZINC)
23	436243	3	436243	3	436243	3	INTERLOCK SWITCH
24	438295	5	438295	5	438295	5	CORD GRIP PG-9
25	011214	6	011214	6	011214	6	M5 X 16 SHCS (ZINC)
26	514331	2	514331	2	514331	2	5 WIRE GROMMET HOLDER
27	515592	3	515592	3	515592	3	INTERLOCK SWITCH SPACER
N/S	515141	1	515141	1	515141	1	MACHINE WIRE HARNESS
N/S	515674	1	515145	1	515145	1	POWER HARNESS
28	515135	1	515135	1	515135	1	TERMINAL BLOCK GROUND
29	515136	1	515136	1	515136	1	END CAP
30	262617	2	262617	2	262617	2	M6 FW (ZINC)
31	515134	2	N/A		N/A		TERMINAL BLOCK
32	014797	1	N/A		N/A		1/2" GLAND NUT SLIP RING
33	515773	1	515773	1	515773	1	TIME DELAY RELAY
34	515137	2	515137	2	515137	2	DIN RAIL CLAMP
*N/S			515040	1	515040	1	SIGN DISPOSITION
N/S	439403	1	439403	1	439403	1	PLUG ASSEMBLY (3CRE)
N/S	515765	REF	515763	REF	515763	REF	SCHEMATIC
N/S	515839	1	515839	1	515839	1	PHARMA HARNESS
N/S	515775	1	515775	1	515775	1	HARNESS

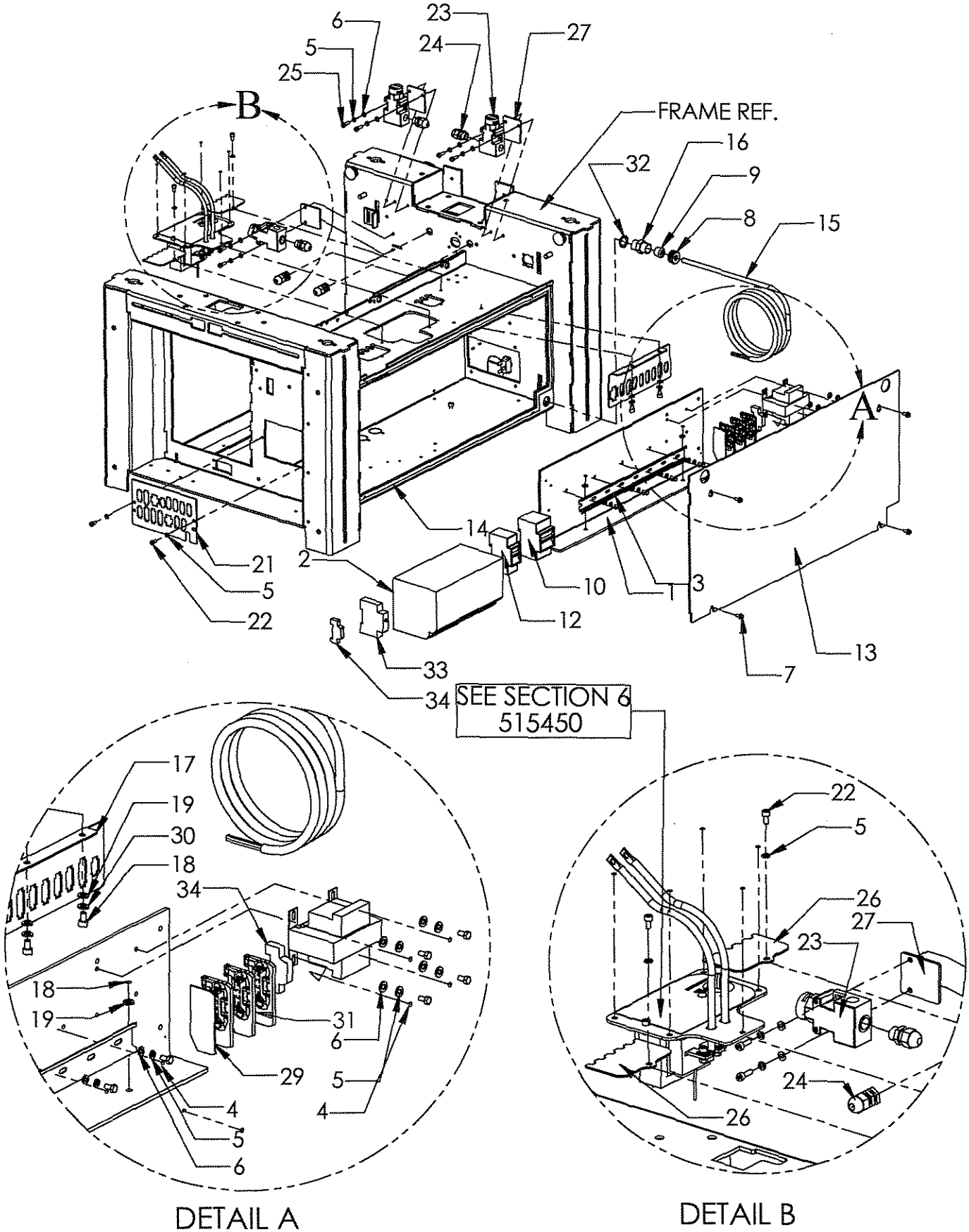
6
23
5
24
27
25
B
FRAME REF.
16
32
9
8
15
A
14
21
2
5
10
1
3
22
12
13
33
7
34
SEE SECTION 6
515450
17
19
30
18
34
18
19
31
6
29
5
4
4
5
6
22
5
26
27
23
24
26
DETAIL A
DETAIL B

KEY	QTY.	PART No.			DESCRIPTION
		515842	515843	515844	
		110/220V/1Ph	460V/3Ph	230V/3PH	
1	1	515627	515627	515627	LBX 2300 PLC DIN RAIL
2	1	439433	439433	439433	COUNTER
3	1	439434	439434	439434	MOUNTING PLATE - COUNTER
4	1	438280	438280	438280	FILLER PLATE
5	1	438449	438449	438449	POWER DISCONNECT
6	1	515611	515611	515611	DISCONNECT SWITCH PLATE
7	1	514337	514337	514337	SOLID STATE RELAY
8	1	515610	515610	515610	HIGH/LOW VOLTAGE ACCESS
9	1	515608	515608	515608	HIGH/LOW VOLTAGE SEPARATOR
10	1	515084	515084	515084	SIEMENS PLC 40 I/O
11	REF	INC. W/ HARNESS	INC. W/ HARNESS	INC. W/ HARNESS	2 POSITION TOGGLE SWITCH
12	6	162383	162383	162383	M4 X 8 SHCS (ZINC)
13	6	185700	185700	185700	M4 LOCKWASHER HC (ZINC)
14	2	162568	162568	162568	M3 LOCKWASHER (ZINC)
15	2	262551	262551	262551	M3 X 8 SHCS (ZINC)
16	1	434448	434448	434448	VARISTOR - 39 VOLTS
17	1	438275	438275	438275	VISE- ACTION LATCH
18	1	515436	515436	515436	SIDE ELECTRICAL DOOR
19	1	515129	515129	515129	RELAY AND FUSE MODULE
20	1	438276	438276	438276	8MM SQ. KEY
21	2	170118	170118	170118	M5 X 10 SBHCS (ZINC)
22	6	281532	281532	281532	M5 X 10 SHCS (ZINC)
23	8	010076	010076	010076	M5 LOCKWASHER (ZINC)
24	2	171571	171571	171571	M5 FLATWASHER (ZINC)
25	7	433919	433919	433919	M6 X 12 SHCS
26	7	010077	010077	010077	M6 LOCKWASHER HC (ZINC)
27	7	515439	515439	515439	NEOPRENE GASKET 3/16" THICK
28	1	515574	515574	515574	AUTOMATIC CONV. CONTROL BOX
29	1	431757	431757	431757	M6 EXT. LW.
30	1	005465	005465	005465	M6 NUT (ZINC)
31	1	515707	515707	515707	PLC EXPANDER
32	1	516223	516223	516223	RESISTOR ASSEMBLY
33	1	436097	436097	436097	SOLID STATE RELAY
34	1	436099	436099	436099	END BARRIER
35	2	162568	162568	162568	M3 LW
36	2	251247	251247	251247	M3x10 SHCS

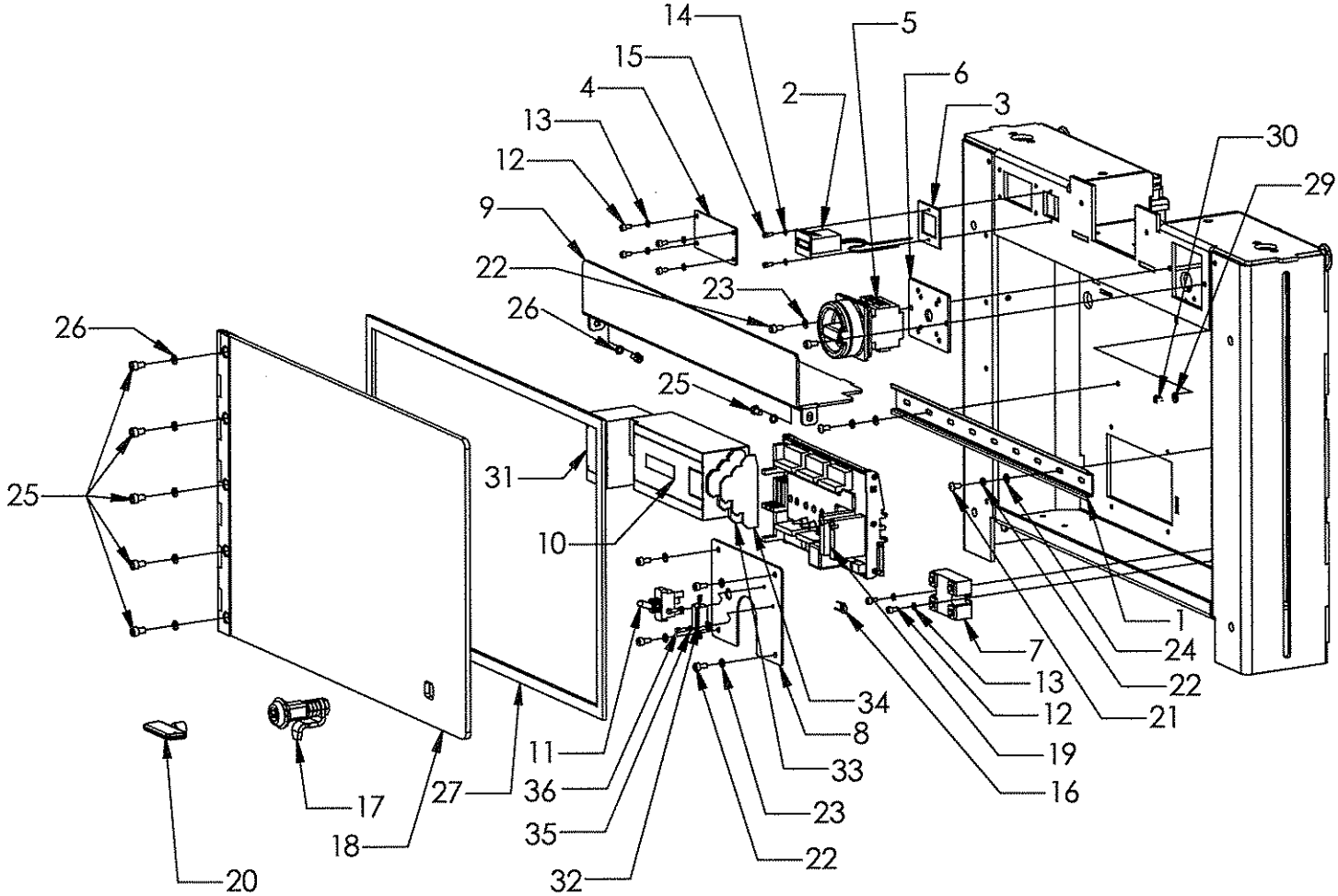
14
5
15
6
4
2
3
13
30
12
29
9
22
23
26
26
25
25
31
10
1
7
24
13
22
34
12
21
8
19
11
33
16
36
27
17
23
35
18
22
32
20

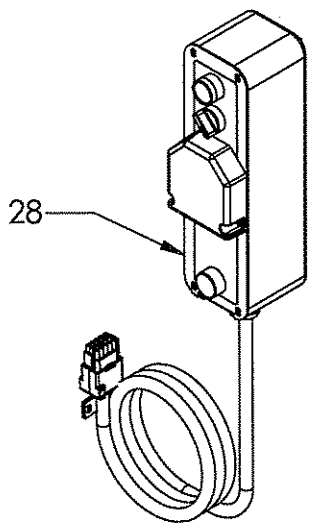
28

LBX-2000/2300 SPARE PARTS KIT

KEY	QTY.	P/N	DESCRIPTION
1	2	264313	15 x 32 x 9 BALL BEARING
2	4	274924	6 x 19 x 6 BEARING
3	2	514639	CAM FOLLOWER
4	2	434792	DIE SPRING LHL-375D-1
5	2	516770	FUSE - 2.0 A SLO BLO
6	2	434425	FUSE 3.0A FAST ACT (BUSSMANN GMA-3A)
7	1	438752	SWITCH ACTUATOR
8	2	514747	PROXIMITY SENSOR
9	1	514635	CUTTER
10	3	514674	COMPRESSION SPRING
11	1	514684	DU BUSHING
12	1	514807	5/16" OD X 1/4" ID X 1/2" LG BRONZE BUSHING
13	1	434657	EXTENSION SPRING
14	2	514679	COMPRESSION SPRING
15	2	514394	FUSE - 12.5A SLO BLO
16	1	514667	FLANGE BUSHING
17	1	514650	HOT KNIFE WELDMENT
18	2	516771	HOT KNIFE CABLE
19	1	514658	EXTENSION SPRING
20	1	514337	SSR
22	1	436243	INTERLOCK SWTICH
23	1	434655	BALL BEARING 6000-2RS
24	1	514693	BALL BEARING 634-ZZ
25	2	514393	FUSE - OUTPUT MODULE
26	2	519279	CHUTE SPRING, LARGE
27	2	519280	CHUTE SPRING, SMALL
28	2	519388	FUSE, 16 A SLO BLO

LBX-2330 (2 BELT) SPARE PARTS KIT

KEY	QTY.	P/N	DESCRIPTION
1	2	264313	15 x 32 x 9 BALL BEARING
2	4	274924	6 x 19 x 6 BEARING
3	2	514639	CAM FOLLOWER
4	2	434792	DIE SPRING LHL-375D-1
5	2	516770	FUSE - 2.0 A SLO BLO
6	2	434425	FUSE 3.0A FAST ACT (BUSSMANN GMA-3A)
7	1	438752	SWITCH ACTUATOR
8	2	514747	PROXIMITY SENSOR
9	1	514635	CUTTER
10	3	514674	COMPRESSION SPRING
11	1	514684	DU BUSHING
12	1	514807	5/16"O.D.x1/4"I.D.x1/2"LG BRONZE BUSHING
13	1	434657	EXTENSION SPRING
14	2	514679	COMPRESSION SPRING
15	2	514394	FUSE- 12.5A SLO BLO
16	1	514667	FLANGE BUSHING
17	1	514650	HOT KNIFE WELDMENT
18	2	516771	HOT KNIFE CABLE
19	1	514658	EXTENSION SPRING
20	1	514337	SSR
22	1	436243	INTERLOCK SWTICH
23	1	434655	BALL BEARING 6000-2RS
24	1	514693	BALL BEARING 634-ZZ
25	2	438460	CONVEYOR BELT, 2 BELT
26	1	514636	CUTTER SCREW
27	2	514393	FUSE-OUTPUT MODULE
28	2	519279	CHUTE SPRING, LARGE
29	2	519280	CHUTE SPRING, SMALL
30	2	519388	FUSE, 16 A SLO BLO

LBX-2330 (3 BELT) SPARE PARTS KIT

KEY	QTY.	P/N	DESCRIPTION
1	2	264313	15 x 32 x 9 BALL BEARING
2	4	274924	6 x 19 x 6 BEARING
3	2	514639	CAM FOLLOWER
4	2	434792	DIE SPRING LHL-375D-1
5	2	516770	FUSE - 2.0 A SLO BLO
6	2	434425	FUSE 3.0A FAST ACT (BUSSMANN GMA-3A)
7	1	438752	SWITCH ACTUATOR
8	2	514747	PROXIMITY SENSOR
9	1	514635	CUTTER
10	3	514674	COMPRESSION SPRING
11	1	514684	DU BUSHING
12	1	514807	5/16"O.D.x1/4"I.D.x1/2"LG BRONZE BUSHING
13	1	434657	EXTENSION SPRING
14	2	514679	COMPRESSION SPRING
15	2	514394	FUSE- 12.5A SLO BLO
16	1	514667	FLANGE BUSHING
17	1	514650	HOT KNIFE WELDMENT
18	2	516771	HOT KNIFE CABLE
19	1	514658	EXTENSION SPRING
20	1	514337	SSR
22	1	436243	INTERLOCK SWTICH
23	1	434655	BALL BEARING 6000-2RS
24	1	514693	BALL BEARING 634-ZZ
25	3	515368	CONVEYOR BELT, 3 BELT
26	1	514636	CUTTER SCREW
27	2	514393	FUSE-OUTPUT MODULE
28	2	519279	CHUTE SPRING, LARGE
29	2	519280	CHUTE SPRING, SMALL
30	2	519388	FUSE, 16 A SLO BLO